This is a digital copy of a book that was preserved for generations on library shelves before it was carefully scanned by Google as part of a project to make the world's books discoverable online.

It has survived long enough for the copyright to expire and the book to enter the public domain. A public domain book is one that was never subject to copyright or whose legal copyright term has expired. Whether a book is in the public domain may vary country to country. Public domain books are our gateways to the past, representing a wealth of history, culture and knowledge that's often difficult to discover.

Marks, notations and other marginalia present in the original volume will appear in this file - a reminder of this book's long journey from the publisher to a library and finally to you.

**Usage guidelines**

Google is proud to partner with libraries to digitize public domain materials and make them widely accessible. Public domain books belong to the public and we are merely their custodians. Nevertheless, this work is expensive, so in order to keep providing this resource, we have taken steps to prevent abuse by commercial parties, including placing technical restrictions on automated querying.

We also ask that you:

+ *Make non-commercial use of the files* We designed Google Book Search for use by individuals, and we request that you use these files for personal, non-commercial purposes.

+ *Refrain from automated querying* Do not send automated queries of any sort to Google's system: If you are conducting research on machine translation, optical character recognition or other areas where access to a large amount of text is helpful, please contact us. We encourage the use of public domain materials for these purposes and may be able to help.

+ *Maintain attribution* The Google "watermark" you see on each file is essential for informing people about this project and helping them find additional materials through Google Book Search. Please do not remove it.

+ *Keep it legal* Whatever your use, remember that you are responsible for ensuring that what you are doing is legal. Do not assume that just because we believe a book is in the public domain for users in the United States, that the work is also in the public domain for users in other countries. Whether a book is still in copyright varies from country to country, and we can't offer guidance on whether any specific use of any specific book is allowed. Please do not assume that a book's appearance in Google Book Search means it can be used in any manner anywhere in the world. Copyright infringement liability can be quite severe.

**About Google Book Search**

Google's mission is to organize the world's information and to make it universally accessible and useful. Google Book Search helps readers discover the world's books while helping authors and publishers reach new audiences. You can search through the full text of this book on the web at `http://books.google.com/`

HARVARD UNIVERSITY

LIBRARY OF THE
MINERALOGICAL
LABORATORY

UNIVERSITY MUSEUM

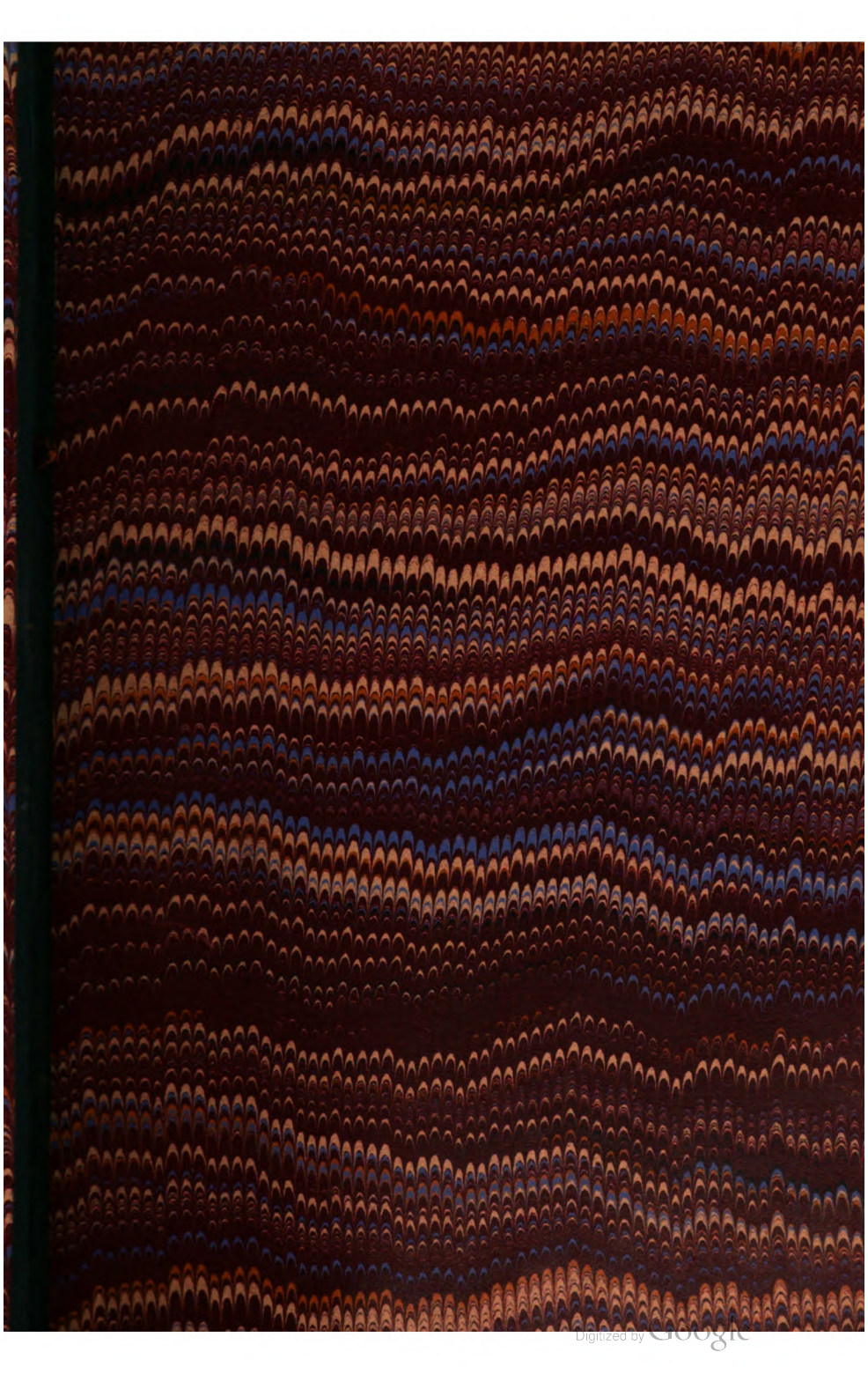
Digitized by Google

Digitized by Google

Digitized by Google

Digitized by Google

# TRANSACTIONS

OF

## THE INSTITUTION OF

# MINING & METALLURGY,

**LONDON.**

## SEVENTH SESSION.

---

## VOL. VI.

---

EDITED BY

ARTHUR C. CLAUDET, A.R.S.M.

(*Member of Council*).

---

LONDON:

PUBLISHED BY

THE INSTITUTION OF MINING AND METALLURGY,

BROAD STREET HOUSE, E.C.

1898.

Digitized by Google

Dec. 31, 1923
HARVARD UNIVERSITY
MINERALOGICAL LABORATORY

---

*The Institution as a body is not responsible for any statements or opinions expressed in its Publications.*

---

Digitized by Google

# COUNCIL—1898–99.

President:

WALTER McDERMOTT.

Vice-Presidents:

C. ALGERNON MOBEING, M.Inst.C.E., F.G.S.

EDGAR TAYLOR.

Members:

CHARLES J. ALFORD, F.G.S.
R. T. BAYLISS, M.Inst.C.E.
A. JOHNSTONE CAMPBELL, A.R.S.M.
A. G. CHARLETON, A.R.S.M.
ARTHUR C. CLAUDET, A.R.S.M., F.I.C.
S. HERBERT COX, A.R.S.M., F.G.S.
WILLIAM FRECHEVILLE, A.R.S.M.
J. HAYS HAMMOND.
EDWARD HOOPER, Assoc.M.Inst.C.E.
ALFRED JAMES, F.G.S.
HENNEN JENNINGS.
BENEDICT KITTO, F.G.S., F.I.C.
ARTHUR L. PEARSE, F.G.S.
H. C. PERKINS.
EDWARD RILEY, F.I.C.
R. P. ROTHWELL.
WILLIAM THOMAS, Assoc.M.Inst.C.E. F.G.S.
CLAUDE VAUTIN.

Past Presidents:

(*Ex-officio Members of Council.*)

*GEORGE SEYMOUR, A.R.S.M., M.Inst.C.E.
Professor A. K. HUNTINGTON, A.R.S.M., F.I.C.
J. H. COLLINS, F.G.S.
JOSEPH GARLAND, M.Inst.C.E., F.G.S.
JAMES MACTEAR, M.Inst.C.E., F.I.C.

Hon. Secretaries:

S. HERBERT COX, A.R.S.M., F.G.S.
BENEDICT KITTO, F.G.S., F.I.C.
ARTHUR L. PEARSE, F.G.S.

Hon. Treasurer:

ARTHUR C. CLAUDET, A.R.S.M., F.I.C.

Honorary Counsel:

E. J. CASTLE, Q.C.

---

Bankers:

Messrs. PRESCOTT, DIMSDALE & Co., Limited,
*Cornhill, E.C.*

Auditors:

Messrs. WOODTHORPE, BEVAN & Co., C.A.,
*Leadenhall Buildings, E.C.*

Secretary:

ERNEST H. PEERS,
*Broad Street House. New Broad Street, E.C.*

---

* Deceased.

Digitized by Google

Digitized by Google

# CONTENTS.


| | PAGE |
|---|---|
| The Council of the Institution .. .. .. .. | iii |
| Notes on Sump Solutions, Extractor-box Work, and Cleaning-up, in the Cyanide Process. By ALFRED JAMES. | 2 |
| The so-called Lode Formations of Hannan's and Telluride Deposits. By H. P. WOODWARD .. .. .. .. | 14 |
| Notes on the Sampling of Argentiferous and Auriferous Lead, with Diagrams illustrating the Unequal Distribution (Segregation) of the Precious Metals. By ARTHUR C. CLAUDET .. .. .. .. .. .. .. | 29 |
| Notes on the South German Mine, Maldon, Victoria. By JAMES MACTEAR (President) .. .. .. .. .. | 43 |
| Mining in Perak. By FRANK OWEN .. .. .. .. | 51 |
| Note on the so-called "Selective Action" of Cyanide of Potassium for Gold. By W. A. DIXON .. .. .. | 88 |
| Mining on the Black Reef, Witwatersrand Goldfields, South Africa. By W. FISCHER WILKINSON .. .. .. | 94 |
| Notes on the Buying and Sampling of Ores, and the Working of Mines on the Tribute System, in Chili. By GERALD V. HOPKINS .. .. .. .. .. .. .. | 108 |
| On the Successful Treatment of Tailings by the Direct Filling Process on the Witwatersrand. By F. CARDELL PENGILLY .. .. .. .. .. .. .. | 113 |
| Notes on the action of Cyanogen on Gold. By JAMES PARK | 120 |
| Mexican Methods of Mining. By S. B. NEWALL .. .. | 130 |
| Notes of a Visit to the Gold Mines at Kalgoorli, Western Australia. By WILLIAM FRECHEVILLE .. .. .. | 140 |
| Notes on Shaft Sinking. By WILLIAM TEAGUE .. .. | 159 |
| On Diamond Drilling in the Transvaal. By W. WYBERGH.. | 164 |
| Report of the Council .. .. .. .. .. .. | 175 |


Digitized by Google

PAGE

Statement of Funds .. .. .. .. .. .. 178

Presidential Address. By WALTER MCDERMOTT .. .. 183

The Minerals which accompany Gold, and their bearing upon the Richness of Ore Deposits. By T. A. RICKARD.. 194

Notes on the Electrolysis of Argentiferous Copper. By WILLIAM TERRILL .. .. .. .. .. .. 215

Some Notes on the Recovery of Gold from Cyanide Solutions. By SHERARD COWPER-COLES .. .. .. .. 219

Determination of the Present Value of a Mine on the Rand. By FRED. HELLMANN .. .. .. .. .. .. 229

Notes on a Combination Mill in the United States. By WALTER MCDERMOTT (President) .. .. .. .. 245

Filter-Press Treatment of Gold Ore Slimes (Hannan's, West Australia). By WILLIAM MCNEILL .. .. .. 247

The Portable Mono-rail Transport System. By C. C. HOYER MILLAR.. .. .. .. .. .. .. 269

On the Occurrence of Diamonds at Inverell, New South Wales. By H. M. PORTER .. .. .. .. .. 273

On the Use of Fuel at Caylloma, Peru. By BERNARD HUNT 278

The Treatment of Broken Hill Sulphide Ores by Wet Extraction Processes, and the Electrolytic Deposition of Zinc. By EDGAR A. ASHCROFT .. .. .. .. 282

Some Peculiarities occurring in the Melting of Gold and Silver Bullion of various Finenesses. By GEORGE ATTWOOD .. .. .. .. .. .. .. .. 338

Digitized by Google

# SEVENTH SESSION, 1897-98.

## FIRST ORDINARY MEETING, 20th October, 1897.

Mr. JAMES MACTEAR (*President*) in the Chair.

THE minutes of the last meeting having been read and confirmed,

**The President** said that, before proceeding with the business, he desired to call attention to the fact that since they last met they had had the misfortune to lose three of their members by death; Mr. Thomas J. Bewick, M.Inst.C.E., who must have been well known to many of them and who was a personal friend of his, had gone over to the majority. His death was undoubtedly a great loss to the Institution. They had also lost Mr. R. Spencer Hawkins, A.R.S.M., one of their Associates who had a very promising career before him. They had sustained another loss in the person of Mr. P. W. Duffield, and it would no doubt be remembered that at their last meeting that gentleman presented a short paper to the Institution. It was noticed that he was far from well at the time, and his decease followed in a very few weeks. These losses were much to be deplored as all three gentlemen were members of mark, and men who were of great advantage to the Institution.

The following paper was then taken as read, having previously been issued—



Digitized by Google

## "Notes on Sump Solutions, Extractor-box Work, and Cleaning-up, in the Cyanide Process."

By Alfred James, M.Inst.M.M.

*Sump Solutions.*—One of the problems at present agitating the minds of cyanide operators is the effect on the extraction of gold caused by the continued re-use of the cyanide solutions. Such solutions contain, amongst other matters, salts of zinc, iron, occasionally copper, alkalies and alkaline carbonates, ammonia, and sulphocyanides; and it is obvious that, unless these constituents are prevented from accumulating in the solutions, the solvent power on the precious metals of any added cyanide must sooner or later be impaired.

Solutions which had been in use for some months were therefore examined, and the results noted: it was found that the extractions returned were in every case less than those obtained on the same material—ores or tailings—by making up cyanide solutions of the same strength with fresh water. Thus:—

| | Extraction with fresh solutions. | | | Extraction with used solutions. | | | |
|---|---|---|---|---|---|---|---|
| | oz. | dwt. | gr. | oz. | dwt. | gr. | |
| (*a*) | 15 | 13 | 14 | 15 | 0 | 12 | per ton. |
| (*b*) | 20 | 18 | 3 | 18 | 13 | 16 | „ |
| (*b'*) | 21 | 0 | 17 | 19 | 0 | 5 | „ |
| (*c*) | 3 | 17 | 2 | 3 | 13 | 5 | „ |
| (*c'*) | 3 | 18 | 9 | 3 | 13 | 5 | „ |

It may be suggested that the presence of double cyanide of zinc and potassium ($K_2ZnCy_4$) may have misled the operator as to the strength in cyanide of the solutions, but it will be shown that this matter has received special attention, and that the results were similar, even when equal quantities of solid cyanide of potassium were added to fresh water and to a solution of double cyanide of potassium and zinc with caustic potash present.

Experiments were carried out with the object of overcoming this loss of power in the used or "sump" solutions, and it was

Digitized by Google

found that the addition of lime improved the extractions from ores and tailings containing practically only quartz and gold, but that such treatment had a deteriorating effect on ores, &c., containing sulphides. Thus:—

| | Extraction with sump solution only. | | | Extraction with sump solution treated with lime. | | | |
|---|---|---|---|---|---|---|---|
| | oz. | dwt. | gr. | oz. | dwt. | gr. | |
| (*a*) | 12 | 15 | 2 | 27 | 0 | 23 | per ton. |
| (*a'*) | 13 | 1 | 8 | 29 | 9 | 6 | „ |
| (*b*) | 18 | 13 | 16 | 25 | 14 | 4 | „ |
| (*b'*) | 19 | 0 | 5 | 25 | 14 | 7 | „ |
| (*c*) | 4 | 1 | 1 | 3 | 1 | 0 | „ |
| (*c'*) | 3 | 18 | 9 | 3 | 0 | 2 | „ |

With fresh solution the extractions in this set on *c* and *c'* were 4 oz. 1 dwt. 1 gr. and 3 oz. 19 dwt. 7 gr. respectively. *a* and *b* were simple quartz ores containing free gold, and *c* was an ore carrying a considerable percentage of sulphides.

A number of experiments were carried out on the above lines, and the above results were confirmed. Lime being thus shown to be ineffective, except with simple quartz ores, treatment of the solutions with sodium sulphide, followed by excess of a soluble lead salt, such as acetate or chloride, was tried with the following results:—

| | Extraction with fresh solution. | | | Extraction with sump solution. | | | Extraction with "treated" sump solution. | | |
|---|---|---|---|---|---|---|---|---|---|
| | oz. | dwt. | gr. | oz. | dwt. | gr. | oz. | dwt. | gr. |
| (*c*) | 3 | 17 | 2 | 3 | 13 | 5 | 3 | 17 | 2 |
| (*c'*) | 3 | 18 | 9 | 3 | 13 | 5 | 3 | 19 | 16 |

It is thus evident that the continued use of sump solutions is a cause of serious loss in actual work, and that, though a universal law cannot be laid down for the best treatment of such sump solutions, it is strongly desirable that these solutions should, from time to time, be tested, and the results obtained compared with those from freshly made up solutions; also that the addition of lime, with time for the subsidence of any precipitate formed, is of advantage in the case of very free and coarse gold ores; and that the treatment with sodium sulphide, care being taken to avoid an excess, followed by the addition of a small amount of lead salt in excess, is efficacious where lime fails. In this latter treatment time must also be given for any precipitated sulphides to separate out and subside.

By such treatment the necessity of running foul sump solutions



Digitized by Google

to waste may be avoided, when water is scarce or the cyanide or gold contents are high.

*The Effect of Zinc in Solution.*—The usual practice of precipitating the gold by running the aurocyanide solutions through boxes containing zinc, causes the accumulation in the solutions of a considerable quantity of zinc salts. It has been more than once suggested that the double cyanide of zinc and potassium in the presence of caustic potash splits up into a simple cyanide plus oxide of zinc and potassium—

$$K_2ZnCy_4 + 4KHO = 4KCy + K_2ZnO_2 + 2H_2O.$$

The author, however, discovered by means of experiments involving the crystallising out of the products, that the above equation did not hold good, but that, on the contrary, any oxide of zinc and potassium in solution combined with the added cyanide of potassium to form the double cyanide of zinc and potassium. Thus:—

$$K_2ZnO_2 + 4KCy + 2H_2O = K_2ZnCy_4 + 4KHO.$$

This shows that the zinc oxide in solution actually takes up the cyanide added by the chemist in charge to make the solutions of normal strength, though the silver test leaves the operator in ignorance of what has happened, and thus *renders it less effective for the solution of the gold than the cyanide by itself would have been.*

The following experiments illustrate this point:—

| | Extraction with a fresh 0·5 per. cent. KCy solution. | | | Extraction with portion of same 0·5 per cent. solution, to which 0·25 per cent. $K_2ZnO_2$ was added. | | | |
|---|---|---|---|---|---|---|---|
| | oz. | dwt. | gr. | oz. | dwt. | gr. | |
| (*a*) | 2 | 9 | 0 | 1 | 11 | 9 | per ton. |
| (*b*) | 16 | 2 | 3 | 13 | 6 | 14 | ,, |
| (*c*) | 1 | 17 | 21 | 1 | 2 | 20 | ,, |
| (*d*) | 12 | 18 | 17 | 7 | 4 | 0 | ,, |

This is one of the drawbacks of the zinc process as compared with the electrical deposition process, which leaves the solutions in a condition of much greater energy, though the iron anodes used in the latter process are necessarily detrimental. Insoluble anodes are much needed. The accumulation of zinc in solution is, however, prevented by the action of the sulphides contained in the ore and in the cyanide, and treatment with sodium sulphide and lead salt as shown above is a good remedy for this inefficiency.

*Losses in Cleaning-up.*—Perhaps in no other part of the process

Digitized by Google

are there so many variations in the methods pursued as in that of the clean-up. At the end of the bimonthly or monthly period the boxes are charged with slimes containing usually gold, silver, lead, zinc, iron, lime, and, in certain instances, copper; and the object in view is the conversion of these slimes into bullion with the least possible loss. To accomplish this, the treatment varies from the direct melting of the coarse zinc and slimes to separation by sieves, roasting, or acid treatment, with or without filter pressing, and subsequent fusion.

To determine, if possible, the amount of loss arising from these different methods, and the best general course to be adopted, a system of very carefully conducted experiments has been carried out and the results tabulated and compared.

At first the experiments were on known weights of metallic gold and zinc in the proportions used in practice: the gold was dissolved, precipitated from its aurocyanide solution by the zinc, shaken off the zinc in the form of gold slimes, the zinc remaining was dissolved separately and the residue added to the gold slimes, which were then treated by the various methods, and the amount of bullion recovered noted together with its fineness: the deficit from the amount originally taken represented the loss in treatment. In some cases the coarse zinc was disintegrated and dissolved by the addition of alkali and cyanide, instead of acid, with the results given below.

In the final experiments, however, to gain more accurate cmoparative results, a large quantity of gold slimes was made, shaken off the zinc, dried, well mixed, and equal quantities taken from the bulk for the various experiments; these were carried out in duplicate, no two duplicate samples, however, were weighed consecutively. In the first set the losses were found to vary from 0·5 per cent. to 6 per cent., and, as a general rule, the less handling the slimes received the less was the loss. The heaviest losses were due to roasting, and varied with the amount of stirring or handling during the operation; *the least loss from this cause was* 0·23 *per cent. additional* to that resulting from the rest of the treatment.

In a method of roasting with nitre recently described in the *Journal of the Society of Chemical Industry* (January, 1897), the *total loss amounted to* 2·57 *per cent.*, in spite of the greatest care in heating the mixture, and in adding as little nitre as would act in the manner described in the paper; probably, with practice, this loss would be considerably reduced, but it is still too serious a matter to be lightly considered.

Digitized by Google

Acid treatment yielded results varying with the kind of acid used, nitric acid showing a greater loss than hydrochloric and sulphuric. On the other hand, with impure zinc, that in ordinary use, nitric acid gave the purest bullion, but with lead-free zinc dilute sulphuric acid gave both the purest bullion and the lowest acid loss.

A comparison between melting direct and a preliminary treatment with sulphuric acid gave results depending on the purity of the slimes; where these had been passed through a 40-mesh sieve to free them from coarse zinc, melting direct gave a fairly pure bullion and at least as good results as with acid treatment, but with scrap and coarse zinc included the advantage lay with the latter method.

The least total loss in the first set of 19 experiments was 0·75 per cent., and this was obtained by treatment with sulphuric acid before melting. An experiment with lead-free zinc gave a total loss of only 0·52 per cent. with direct fusion of the sieved slimes, the coarse zinc being treated with sulphuric acid and the residue added to the slimes. Pure zinc invariably showed a smaller loss than with ordinary zinc, and very careful work on identical lines showed such gain, or lessened loss, to be 0·2 per cent.

Treatment of the slimes with strong solutions of alkali and cyanide, with or without subsequent acid treatment, gave heavier losses.

There was, however, considerable variation in the results obtained, though the general direction of the losses was well established, and to limit such variation as well as to still further study the effect of the use of lead-free zinc in the cleaning-up operations, the final sets of experiments were carried out, in which all the samples were taken from the same bulk of previously prepared and well mixed gold slimes, as mentioned above, and these samples were then submitted to variations in treatment. Similar experiments were also made with the slimes from lead-free zinc prepared under identical conditions. The results were as follows, the loss for simple melting with borax being taken as $x$:—

| | |
|---|---|
| Melting with borax | $x$ |
| Roasting, then melting | $x$ + 0·23 per cent. |
| Sulphuric acid, then melting | $x$ + 0·17 „ |
| Sulphuric acid, roasting, then melting | $x$ + 0·40 „ |
| Nitric acid, then melting | $x$ + 0·29 „ |

Digitized by Google

and $x$ in the case of pure lead-free zinc amounted to 0·43 per cent.; in the case of ordinary zinc it was greater than this, the amount of excess exceeding the 0·2 per cent. given above.

With lead-free zinc, sulphuric acid gave the purest bullion and roasting the most base, the roasted bullion being more base than that melted direct with borax. With ordinary zinc, however, nitric acid gave the purest bullion; sulphuric acid came next; direct melting with borax yielded bullion considerably baser than the others. The loss by acid treatment was greater than with lead-free zinc and the loss by roasting less; it is suggested that the presence in the slimes of lead, which is converted during the roasting to fluid lead oxide, may account for the lessened loss in roasting with the ordinary zinc.

These last results confirm those from former experiments, and show that with ordinary zinc, as well as with lead-free zinc, direct melting with borax gives the least loss, and that the safest method of purifying the bullion is by sulphuric acid treatment; that the use of lead-free zinc with a sieving arrangement renders any special method of purification unnecessary, and diminishes the treatment loss. All the experiments agree in showing that roasting is the cause of more or less heavy loss, and though effective with ordinary zinc in raising the grade of the bullion, is less efficient than acid treatment for this purpose.

It is therefore suggested that in cleaning-up means should be employed to avoid handling, and to limit the number of vessels used, and that roasting should be absolutely avoided. The following description of a plant has been prepared on these lines.

Zinc boxes (extractors) to have steel side launders for discharging the slimes direct through a 40-mesh sieve into small steel vessels with perforated bottoms, over which a filter cloth is placed. These steel vessels fit into small vats, one for each vessel, and are arranged so that the overflow of the slimes passes into a large vat of sufficient capacity, from which the lighter slimes which have passed out of the small steel vessels in the overflow may be collected by the aid of a filter connected to a vacuum receiver, to which all the filters are connected. The slimes may thus be collected and sent to the drying and mixing plate immediately after cleaning up, the one vessel having sufficed for the whole operation; but if acid treatment is used, the steel vessel, with its contained cake of slimes, is taken to the acid vat and emptied into it. The acid vat may be of wood, lead lined, or of steel coated with special protective varnish, or of aluminium, which answers perfectly and is clean, and is not attacked by

Digitized by Google

sulphuric or even nitric acid. The dissolved slimes are washed with hot water and filter-pressed, or preferably run into a detachable steel-lined filter vat with a vacuum connection, washed, vacuum dried, mixed with fluxes, and melted. The author prefers a vacuum vat in place of a filter press as being cleaner, easier to handle, and leaving the slimes in one mass without the inconvenience and loss attendant upon the use of the many connections, plates, and filter cloths (all impregnated with gold slimes) necessary to a filter press.

*Purity of Gold Bullion.*—The fine, amounting to from 3*d.* to 1*s.* 8*d.* per ounce of fine gold, imposed by the London refiners upon base bullion containing lead, has caused much attention to be paid to the question of the advisability of returning bullion so pure as to avoid these heavy charges. An investigation has also been made into this matter, and a suggested remedy is to replace the zinc ordinarily used for precipitation by a special brand of lead-free zinc.

In the early days of the cyanide process the inventors feared that lead-free zinc would not be sufficiently energetic to precipitate effectively the gold present in very dilute solutions, but in recent experiments with some lead-free zinc, which contained a minute amount of iron, it was found that in every instance, whether with strong or with exceedingly dilute solutions, a better extraction was obtained with this zinc than with that ordinarily in use, with the single exception of a fortnight's run, in which the results were equally good.

The importance of this result will be understood when one recognises that the adoption of the lead-free zinc will give a purer bullion, and thus avoid the refiners' charges of, on an average, 9*d.* per ounce; will lessen the amount of slimes to be treated and the loss during clean-up of 0·2 per cent., as shown above. Against this is the greater price of the lead-free zinc, but as it takes with low-grade tailings an average amount of 1 lb. of zinc to produce 1 oz. of gold, it is easy to calculate that even if lead-free zinc were 11*d.* per lb. dearer than the ordinary zinc it would still be preferable and cheaper to use the former brand; but, as a matter of fact, the difference in price is very much less than this sum.

In conclusion, it is suggested that increased extractions may almost universally be obtained by the proper treatment of sump solutions, or where water is plentiful, by the making up of fresh solutions from time to time, the old solutions being got rid of as water-washes, after an intermediate period as weak solutions;

Digitized by Google

and that much of the usual "mysterious" discrepancy between theoretical or assay results and the amount of bullion actually returned is due to losses in cleaning-up, and that these losses may be lessened by avoiding roasting and unnecessary handling, and by adopting the precautions detailed above.

The gain to the Witwatersrand Gold Fields from the treatment of sump solutions should be an additional extraction of 5 per cent., or, say, £200,000 per annum, whilst the avoidable loss in cleaning-up is estimated to vary from 0·5 to 2 per cent. of the cyanide output from each particular plant.

---

## DISCUSSION.

**Professor Huntington** said that there appeared to be a tendency to come round to the use of pure zinc, as suggested by Mr. Claudet some time ago, at a meeting of the Institution. His remarks were exceedingly suggestive, and had led to work in the direction indicated. He thought that this fact showed the great utility of bringing these subjects before the members, as up to that time no attention had been paid to the use of specially pure zinc.

**Mr. McDermott** understood that in some works which were being erected in Borneo, they were actually moving in the direction of using solution only once after experimental work on 10-ton lots. The ore was low grade, the yield being about 4 to 5 dwt. per ton. From experiments made by Mr. Claudet on the ore, it was found necessary to use weak solutions, and it had become evident that after a short use the solutions became less active, while the amount of gold they contained was so small that it would probably result in throwing away the solution and the use of fresh solutions, rather than using the old ones over again, as had been the custom. Such variations, however, naturally depended upon the ore, and the quickness with which the cyanide solutions became foul, and their contents in gold.

**Mr. Claudet** thought the paper valuable, as it raised a series of very important questions connected with the cyanide process. With regard to the first table given by the author, "Extraction with fresh solutions as compared with used solutions," he supposed it was per ton of ore, or it might be per ton of liquor. He would have liked to have seen results on very

Digitized by Google

much poorer ores than those mentioned in the paper. It was evident that few works dealt with solutions so strong in gold as 15 oz. 13 dwt., 20 oz. 18 dwt., and 21 oz. The lowest two that were given were 3 oz. 17 dwt. and 3 oz. 18 dwt., and, therefore, the differences between the two were not excessive, but he considered that a comparison with ores or tailings which contained 5 to 10 dwt. of gold per ton, and treated similarly with the two solutions, would afford some valuable information. The reason he should have liked to have seen the difference in the two solutions used on lower grade ore was that it seemed to him that it really became a question of whether it would not pay, by using very weak solutions and precipitating (as he was told could be done) practically all the gold out of those solutions, to run the old cyanide away to waste, and always use fresh cyanide on fresh ore.

With regard to the purity of the gold bullion which Mr. James mentioned, he (the speaker) went into the question in a discussion on a paper read by Mr. R. Gilman Brown,* and proved conclusively that it should pay to get the bullion as fine as possible. It all depended, however, on being able to use zinc free from lead; some members had stated that lead aided precipitation, and he should like to know whether this was really the case. He had also noticed in the Proceedings of the Chemical Society at Johannesburg, that a member stated that he would not care to use zinc which did not contain lead, and thought that the more lead that was present the better the precipitation would be. His opinion was undoubtedly that the finer the bullion the better, as not only were the charges against the bullion lessened, but assaying was rendered very much more perfect, and less liable to errors.

**The President** said that the method of running away solutions to waste was already in use in Victoria in works where roasted pyrites residues were being treated. Very dilute solutions were used, and then run through charcoal filters, afterwards passing through a launder filled with charcoal. He was informed that by this means the gold in the solution was reduced to 12 gr. per ton. It was not an easy matter to test grains of gold per ton of solution, but he had no doubt the result arrived at was fairly correct, and if so such solutions could very well be run away. In a great many cases in which cyanide was used there was, owing to the scarcity of water, no choice but to use the solutions over again, and it then became a serious matter how to get rid of the impurities from the solution before using it again.

* *Trans. Inst. M. M.*, vol. iv, p. 252.

Digitized by Google

The experiments given by Mr. James in his paper were by no means convincing, for the reason that he had, as Mr. Claudet had pointed out, taken a series of rich ores for his experiments which did not at all represent the ordinary class of ore dealt with by cyanide. It would have been much more interesting if the author had given a series of experiments and results based on the treatment of ores on the Rand, because the process had been most successful there, and greater experience had been obtained, and the question of sump solutions and purity of bullion was there a very pressing one.

He thought there was still room for a better method of precipitating the gold; there was no doubt that, as far as it had gone, the zinc process had given good results, but the impure nature of the bullion was a serious drawback to it. One great advantage of the zinc process in the eyes of the managers was that it gave a very large output in ounces, and it would be noticed that the users of the cyanide process were very careful to return the quantity of ounces made from the cyanide process. These, however, were by no means ounces of gold, and as Mr. Claudet pointed out in a paper read before the Institution, some of that bullion went down to 400 fine, and therefore practically only 40 per cent. was pure gold. If such a process as was being worked in Victoria were found to be cheap enough (as was said to be the case) practically pure gold would be obtained.

**Mr. James,** in reply to the discussion, wrote as follows:—

The author corroborated the statement of Professor Huntington, that his investigations into the application of lead-free zinc were undertaken as a result of Mr. Claudet's remarks on this subject.

He did not think they could afford, under usual conditions, to run solutions to waste as suggested by Mr. McDermott and subsequent speakers. This had not been found necessary in general practice, and almost every cyanide plant at present at work was an instance of the continued re-use, frequently for a period of years, of the same liquors with the usual working additions and subtractions, and he suggested that the more economical course was to save the cyanide, the gold, and the water, otherwise lost in the solutions, run to waste, and to attend to the solvent power of these re-used solutions in some such manner as that suggested in the paper.

In reply to Mr. Claudet, the author stated that he had purposely dealt with rich ores and solutions for evidently the same reason as Mr. Claudet had only dealt with bars rich in silver in the paper he was presenting to them that evening. In investigations

Digitized by Google

such as this it was necessary to work with rich ores and solutions containing an appreciable quantity of the precious metals, so that there might be no doubt as to the results. He would remind Members, however, that the results given in the paper were examples of results obtained on a variety of ores of various grades, and even with tailings. Mr. Claudet would see that results on these lines with 5 dwt. pyrites tailings would show roughly as follows:—

| Extracted with fresh solution. | Extracted with sump solution. | Extracted with "treated" sump solution. |
|---|---|---|
| 3·887 dwt. | 3·66 dwt. | 3·915 dwt. |

In which case the differences might have been criticised as errors in manipulation; but, nevertheless, the higher extraction, due to "treating" the sump solutions shows a gain of about 7½ per cent.

As to the possibility of replacing the ordinary zinc by lead-free zinc, it had been a cherished idea dear to all cyanide operators, himself included, that a percentage of lead in the zinc improved the extractor-box results, and the good results yielded by the lead-free zinc had come to him as a surprise. These results had been confirmed by different operators, but he was particularly anxious that members should try this zinc in their boxes for a month's run and report the results obtained to the Institution.

The President had referred to the work in Victoria on precipitating with charcoal. The results given by this method had up to the present been very poor. He believed the parties running it only claimed an 80 per cent. extraction, which was far too low for general adoption with rich solutions. Charcoal had been tried unsuccessfully over and over again, and the figure mentioned, of 12 grains of gold in the effluent solution, showed the unsatisfactory character of the work.

To throw away solutions containing 12 grains of gold per ton would mean an annual loss on the Rand, to which field the President had referred, of about £350,000, and in addition a further loss of a considerable sum in cyanide. Moreover, a very large proportion of the solutions at present treated on the Rand contains less than 12 grains per ton *before* they go into the precipitating boxes, so that the charcoal method would be clearly inapplicable.

In a previous paper he had mentioned that at certain works the effluent solutions left the zinc boxes carrying not over 2 grains of gold per ton of solution, and very frequently 1 grain, or less.

Digitized by Google

Such effective precipitation was absolutely necessary for slimes work, and also where sump solutions were used for the final washing of the residues.

He was happy to be able to inform the previous speakers that the method he suggested had been—perhaps accidentally—put into practice on the Rand with most successful results. At the Crown Reef the cyanide used some two years since contained soluble sulphides, these, aided by the action of the alkali on the pyrites, increased in solution to such an extent as to be clearly perceptible. A soluble salt of lead was consequently added at intervals with the result that the extraction at that mine was probably the highest at Johannesburg for the particular grade of tailings treated.

The following paper was read by Mr. Cox in the absence of the author.

Digitized by Google

## "The so-called Lode Formations of Hannans, and Telluride Deposits."

By H. P. Woodward, M.Inst.M.M.

Hannans, as it was originally, and is still very generally, called, was named after the first discoverer of gold there, Patrick Hannan, but this name has recently been changed by the government officials to Kalgoorlie, the native name of a small hill that is situated close to the township. It is about 400 miles from Perth by railway, in the East Coolgardie Goldfield; this field is the smallest, but at the same time produces the largest quantity of gold of any in the colony. A solid block of country has been taken up upon gold mining leases, of about 10 miles in length, and 2 miles in width, comprising over 700 leases, of which some 10 produce almost the entire out-put of gold of the district.

The first discovery of gold was made near the township, but the deposit, although rich, was soon worked out as being of a very slight thickness, and like many other patches of the same character did not lead to the discovery of any remarkable lodes in the immediate vicinity: the gold was apparently derived from the weathering of a belt of country rock intersected by numerous small rich quartz veins.

The great discovery of the district was made at a point about 4 miles further south, where a group of mines are being worked which bid fair to eclipse the richest known mines in the world. Until quite recently, the character of these lodes at a depth was a matter of great speculation, since in the opinion of many undoubted authorities they were only shrinkage cracks filled in from above, and therefore of probably no great vertical extent. This conclusion was arrived at from the nature of the lode matter, which generally consists of a mottled clay with quartz fragments, through which the fine gold was disseminated; fortunately this has proved to be an incorrect theory, for in sinking to test the lodes at greater depths, highly mineralised veins containing tellurides of gold have been met with.

Digitized by Google

To those who had had previous experience of this most refractory mineral, the discovery was only considered of importance as indicating the probable permanence of the lode in depth. The discovery of any other refractory ore, if it contained so high a percentage of gold, would have been of as great a value to the field, since it rests entirely upon the fact that having passed through the rich decomposed zone, the mineralised portions of the lode still maintain their richness, which had previously been a subject of serious doubt.

Very misleading statements, of course, have been published with regard to these lodes for purely sensational purposes: for in some instances no sooner was any of this mineral discovered than it was carefully picked out and assayed, which was equivalent to picking the gold out of the upper levels, and stating that the whole lode was of equal value.

*Physical Features.*—The surface of the country is mostly flat: but a low range of hills runs in a nearly N. and S. direction from Kalgoorlie to the Boulder, south of which point it is broken, whilst the general level gradually falls southwards toward the lake.

There are no defined watercourses in this district: the rain water being mostly absorbed by the porous nature of the ground, except when very heavy storms occur—in which case large tracts of this almost level country are covered by sheets of water which either gradually soak away, or drain quietly down to the lake.

*Geology.*—The flat surface of the country is covered by a deposit of red loam, beneath which, in some places, a considerable thickness of blue clay is met with, whilst near the hills it is of only slight thickness, and rests directly upon the auriferous series, fragments of which, associated with ironstone and a little quartz, are strewn over the surface, and this last mentioned constituted the dry-blowing patches.

The range itself consists of hard, fine-grained hornblendic schists, intersected by numerous diorite dykes, the whole being capped in many places by deposits of ferruginous claystone.

The rocks, like most of those occurring in Western Australia, do not appear to be of sedimentary origin, but most probably owe their stratified appearance to crystallisation under pressure in the primary cooling of the earth's crust.

They have since been crumpled into a number of anticlinal, and synclinal folds, the strike of the axial planes of which is a few degrees west of north.

*Lodes.*—The lodes or formations, as they are called, are de-

Digitized by Google

cidedly peculiar, consisting, as they do near the surface, of an indurated mottled ferruginous claystone, which proved in places to be extremely rich in gold; but strange to state where such was the case, little or no gold upon the surface was discovered, clearly proving that no denudation has taken place since the gold-bearing portions of the lodes were uncovered. One of the characteristic features of the Western Australian goldfields is the almost total absence of alluvial deposits containing gold. Those surface patches which have been worked, owed their origin entirely to atmospheric agencies, which have also often altered the rocks and lodes to a considerable depth from the surface. Another peculiarity of the Hannan's field is the scarcity of quartz and absence of well-defined quartz veins, thus proving conclusively that the surface gold, which shows no sign of water action, is derived from the weathering *in situ* of belts of country rock traversed by small but rich veins.

The lodes when opened up in the decomposed zone do not exhibit the general characteristics of true fissure veins, since they rarely have defined walls or slickensides to prove that any sliding action has taken place, and when they have, such walls are of limited extent; whilst further, it does not follow that all the material which appears to be lode matter between such walls, or between the points at which the solid blue country is met with, is all ore.

The whole lode formation has a banded or schistose appearance and is mostly of a brownish colour, due to the presence of hydrated oxides of iron, which is soft and greasy to the touch, owing to the fact that it consists largely of hydrated silicates of alumina and magnesia. Portions of the lode also present a mottled appearance of a red, white, and brown colour; the red blotches or streaks are hard, and contain a large percentage of red oxide of iron; the white are soft, being either kaolin or decomposed quartz, the colouring matter from which has been leached out, whilst the brown is the ordinary lode matter.

Small decomposed quartz veins, which are often ferruginous, intersect the lode mass, and it is where these are met with that the lode is found to be richest, all the coarsest gold being associated with the quartz. When these veins are entirely absent, little or no gold is met with; and when it is, it is in a very finely divided state disseminated throughout the entire mass.

The gold met with along the small veins, or in close proximity to them, mostly presents the appearance of precipitated gold of a brownish-yellow colour, which has caused it to be locally named

Digitized by Google

"mustard gold," its origin being apparently due to the decomposition of some other mineral with which it was chemically combined.

At the surface, the lodes apparently run in a more or less N. and S. course; and since there is not a continuous outcrop, an individual lode cannot be traced with the slightest degree of certainty for any great distance. This is further rendered difficult by the fact that several of these lodes are often met with close together, and following apparently the same course, or nearly so, as the lode that it is desirous to follow.

This fact has led to the statements so commonly made that the continuous line of lode from a certain rich mine has been traced into several adjoining leases, the owners of each of which can demonstrate the fact to the satisfaction of almost any visitor.

This delusion can be accounted for by the fact that in many instances these lodes apparently radiate more or less from some of the richest mines, thus indicating that the latter are the main fissures, whilst many of the others may only be shrinkage cracks. When opened up, however, such a thing as a continuous lode is not met with, but a series of lenticular masses, often several hundred feet in length, which make and then cut out or pinch and become too poor to work.

These lenticular masses are found to lie one on to another in splice fashion, therefore, when one pinches, if a cross-cut is driven E. and W., one or more lodes are almost certain to be cut at no great distance from that which has pinched; but although such lode or lodes may, to all appearances, contain similar material, it does not follow that it will be as rich in gold. The rich ore appears to run in well defined shoots, which dip to the south, varying in width from a few inches to several feet, and in length up to several hundred feet; the entire mass of which mostly goes from 3 to 4 oz., whilst large portions are often as rich as from 10 to 20 oz.

This decomposed zone in the lode varies in places from 50 ft. to 300 ft. from the surface; the greatest depths to which it has extended, in many cases, corresponds with the rich portions of the lodes. This is particularly marked when rich shoots outcrop, whilst where the cap of the lode is only cut after sinking, it generally proves to be mineralised from quite near the surface.

In the mineralised portions of the lode, a great change in its character is to be noticed, and it has, if anything, still less the appearance of a true lode than that nearer the surface; however, it continues to be equally as rich, but the gold, instead of being



Digitized by Google

free, occurs in the form of a telluride. The ore is a bluish-green silicious rock, often thickly studded with minute crystals of pyrites, and intersected by quartz veins, which are the richest portions of the lode; but here, as in the decomposed zone, the gold is found to extend often for a considerable distance into the mineralised rock upon either side of them.

Portions of this rock, taken from near the quartz veins, often contain large quantities of small crystals of telluride of gold, pyrites, calcite (which also occurs in veins and vughs), and probably serpentine, thus presenting an entirely different composition to the hornblende and felspar rocks which constitute the country rock, but into which it merges so gradually that it is impossible to say when one ends and the other begins.

The tellurides are met with as veins, splashes, and disseminated minute crystals throughout the entire mass. In the first of these forms, they appear to have been deposited subsequently to the quartz, for the veins intersect the latter, often filling right-angle cracks in them, which, when encountered, make a great show, since they may be seen in places all the way down the side of a shaft for 40 or 50 ft. as veins several inches in width, but which upon being broken into only prove to be of slight thickness, with quartz behind them. Fortunately this is not invariably the case, for in many instances small solid veins of the tellurides, quite independent of the quartz, have been traced for a distance of 60 or 70 ft.

*Origin of the Lodes.*—These lodes were at first supposed to be only shrinkage cracks filled in from the surface by mullocky matter containing gold. This idea was formed on account of the similarity of the decomposed lode stuff near the surface to the clay stone capping known by the diggers as cement, which also in places has proved to be rich in gold.

After striking the caps of mineralised lodes which did not outcrop, but before the existing lodes had been traced down, they were regarded as dykes; but since the older mines have been further opened up, and the decomposed portions traced down, it becomes apparent that neither of these theories are correct, and the only one that is tenable is that advanced by Dr. Penrose in his report upon the origin of the Cripple Creek lodes. This is, that a series of fissures have been formed without any yawning, gaping, or faulting, up which highly heated mineral solutions were forced which permeated the country rock on each side of these cracks, dissolving out certain of its constituents, and replacing them by others, thus altering the nature of the rock to

Digitized by Google

a large extent near the fissure, and gradually less further and further from it until no alteration at all took place, where the country rock remained in its original form.

When a number of these veins are met with, following the same general course, and at no great distance from each other, mineralisation has taken place over a greater extent, thus presenting the appearance of a large lode, whilst when only one occurs, the zone of alteration is of course limited, and therefore the lode is said to be small or to pinch. It is almost needless to mention that the richest portions are almost invariably met with at the most highly mineralised points, and hence where the lodes are largest.

The relation which these lodes bear to the dykes, or in what way their richness is influenced by them, has not yet been worked out, but this will probably be shortly undertaken by the Geological Department, under the direction of Mr. Gibb Maitland, the Government geologist.

The depth to which the zones of decomposition occur vary greatly, even in a short distance, and bear neither any relation to the surface contour, or the water level of the country. At the same time, when the matter is looked carefully into, the reason is apparently clear.

The rocks of the district, except in the immediate vicinity of the lodes, have undergone very little change, since they often outcrop, forming bold rough hills, which are strewn with solid masses of rock. When such is the case, and a lode cap is cut, upon sinking at, say, 50 ft. from the surface in the solid ground, it is found to have undergone little or no alteration, which is clearly due to the protection it has received by the 50 ft. of solid rock above it that may be said to have hermetically sealed it.

Upon the other hand, when large rich lodes outcrop, the oxidising action followed gradually down the same channels, up which the mineral matter found its way, and therefore has proceeded to a considerable depth, whilst in those portions which were poor, and not so highly mineralised, little or no change has taken place even in the same lode, and at the same levels.

The gold in the oxidised zone is clearly derived from the decomposition of the tellurides, since the gradual change from one into the other has been traced, whilst, further, the pyrites prove to contain little or no gold.

*Prospecting for Lodes.*—The best method of testing this class of country is to sink shafts to a depth of about 100 ft. upon the supposed line of lode. Cross-cuts should then be driven E. and



Digitized by Google

W. until a lode is cut, when a level should be driven N. and S. along it.

The general system adopted in prospecting these properties of simply cross-cutting the entire width of the lease is in itself an unsatisfactory method, since it does not follow that because the lode is poor at the point at which it happens to be cut that a rich shoot may not exist at no great distance from the cross-cut along its line of strike; therefore, a property cannot be said to have been thoroughly prospected until such formation has been tested along its entire length.

*Water.*—The scarcity of water has been, and is still, a very serious question along this belt, owing to the fact that it is elevated above the surrounding country; whilst the rocks themselves are not only of a solid nature, but their outcrop is, for the most part, covered by an impervious capping of indurated clay. However, this question is becoming daily less serious, for not only has a considerable supply been struck at a depth of 300 ft. in several of the mines, but also several pumping engines have been erected and pipe lines laid from the lakes and other areas of depression.

The water difficulty in Western Australia has been considerably over-rated, for there are generally sites within a few miles from which abundance of salt water can be obtained by pumping it to the mines; the cost of the latter will not be so great as keeping many of the wet mines in other parts of the world dry.

The quality of the water at present in use is bad, since it contains, besides a large percentage of common salt, a quantity of chloride of magnesium, which is most objectionable in amalgamation, because it sickens the mercury.

*Treatment of the Ore.*—Although the gold is free in the decomposed portions of the lode, the ore is of a very difficult character to treat on account of its very slimy nature, since both the magnesium silicates and hydrated oxides of iron form slimes, which, as estimated in London, amounted to 40 per cent. of the entire lode stuff.

The largest quantity of the ore treated up to the present has been by the ordinary wet stamper mill and amalgamation, which has now been brought to such a perfect state that the tailings contain no more than 8 dwt. of gold per ton, which must be considered as a good result when the nature of the ore, its richness, the fine state of the gold, and the bad quality of the water used are all taken into consideration.

Cyaniding after dry crushing, both with and without amal-

Digitized by Google

gamation, has also been tried, but it was found that when the ore was first passed through the amalgamation barrels it packed in the leaching vats, and therefore retarded the filtration. It is therefore now proposed to reverse the order of treatment, and to amalgamate last, after the fine gold has been dissolved by the cyanide.

A large quantity of ore is being shipped to the smelting works in South Australia, yielding excellent results, but the cost of carriage renders this quite out of the question, except in the case of very rich ore.

The ore from the undecomposed portion of the lode will require special treatment, since the tellurides will have to be dealt with. The experiments conducted so far would indicate that the best method of treatment will be to send the rich ore to the smelting works, now being erected at Fremantle, where fuel and fluxes can be obtained in abundance at a low rate by train, and to treat the lower grade by roughly roasting and cyaniding; whilst if the ore contain any coarse gold, it will probably be found advantagecus to subsequently amalgamate in order to save time in the leaching vats.

*Conclusion.*—The recent developments in these mines seem to point to the permanency and richness of these lodes in depth; therefore, when their richness in the decomposed zone is taken into consideration, and that of the mineralised portion already tested, it may be safely inferred that this district contains some of the most promising ore bodies yet discovered, either in this colony or in any other part of the world.

---

## DISCUSSION.

**The President**, in opening the discussion, remarked that the paper contained a great deal that was new to them with regard to the telluride deposits, and he believed it was the first clear statement that had been received in London with regard to them.

**Mr. T. Rickard** thought the paper was an admirable one, and threw a great deal of light on a very interesting subject. He had not been in Western Australia himself, but the author seemed to have established beyond doubt the permanency of the lode deposits. His reasoning on that point was such as must satisfy both geologists and miners.

The absence of alluvium was very remarkable, but was also

Digitized by Google

observable in other gold mining countries. In Norway, for instance, the want of alluvium was most striking. In the Lake of the Woods district in Canada, the same state of things prevailed; the gold seemed to have been carried away, and buried, in a manner that puzzled the geologist. There appeared to be some alluvium in West Australia, however, and he supposed Mr. Woodward would admit that the material which served as the basis of dry blowing came under that category, and had resulted from the destruction of the vein matter described.

Mr. Woodward was very guarded in his statements about the water; in one place he stated that it was a very serious difficulty, and in another cheerfully remarked that after all the water difficulty was very much over-rated, and that it was less difficult to procure water in West Australia than it was in other countries to keep it out of the workings. Such might be true in individual cases, but he understood that when the mine happened not to be in the vicinity of a lake the absence of water was fatal to enterprise, unless some State-aided engineering was set on foot to provide the mines therewith.

With regard to the nature of the lode and rock formation, he thought it corresponded very much with the deposits in the Lake of the Woods district.

One fact which was patent from the paper was that in the Hannan's district tellurium was more common than in any other part of the world (excepting perhaps Cripple Creek) as a gold carrier, and the information given on the subject was most valuable.

He should like to know what fuel was intended to be used at Fremantle in the works which were about to be erected. He would also be glad to learn where it came from, and at what price it would be delivered at the works.

**Mr. McDermott** noticed that the author mentioned diorite dykes, and believed that in Colorado there was a very marked connection between the dykes and the impregnations of telluride ore. He had not seen any description of the Hannan's field which showed any immediate connection between the dykes and the occurrence of gold, and thought such information might have facilitated the exploration of the country, which he understood had been carried on practically in the dark. Many of the best known properties which had developed very richly had no indications on the surface of any value, and in many cases the discovery of rich ore was the result of cross-cutting across the line of the lodes. While they heard of the rich strikes in the central

Digitized by Google

portion of the Hannan's field, they heard nothing of the thousands of feet of cross-cutting which had been done to the north and south which had met with practically nothing. With regard to this, he noted that the author stated that the system of prospecting properties by cross-cutting the entire width of the lease was unsatisfactory, as it did not follow because the lode was poor at the point it happened to be cut, that a rich shoot might not exist at no great distance from the cross-cut along the line of reef. He was afraid, however, that if every prospect involved such an amount of expenditure on the chance of finding something valuable, most companies would prefer not to run the risk. He thought it was proved that the district in which the valuable impregnations occurred was of a comparatively limited extent; later discoveries might increase the extent, but the amount of money which had been spent north and south of the centre of the field was very large. Any lease in a mining country might, if enough money were spent upon it, develop into value, but there was a limit to which the purse would go in looking for possible riches.

**The President** remarked that some men who flattered themselves that they knew a great deal about the Hannan's field held strongly to the opinion that, until the whole of the lease had been cross-cut, and the lode driven on in both directions to the end of the lease, and also reached the bottom of the lease, the lode has not been proved.

**Mr. C. A. Moreing** thought that one of the most important points which had been brought out by Mr. Woodward's paper was the permanency of the lodes in depth. It was a point which had greatly exercised the minds of investors, and it was very satisfactory to find facts so clearly set forth to prove that the lodes were permanent in depth. In the early days people were of opinion that they were simply shrinkage cracks filled from above, and that at the bottom of the decomposed zone there would be nothing more, and, in many cases the wish was father to the thought. Many people who were largely interested in mines in other countries were very much adverse to seeing Western Australia competing with capitalists for some share of attention, and a great deal of cold water was thrown on Westralian mining, and the great objection was that the field was not permanent in depth. He had not been in Western Australia, but had been kept fairly well informed, and had always held the view that when the undecomposed zone was reached the deposits would be found to continue with the gold in the form of a sulphide, instead of free.

Digitized by Google

It had been found as telluride, and the recent developments in hard rock at several mines showed that very rich deposits existed in the undecomposed zone, and he thought the mere fact, to which Mr. Woodward referred, that some of the richest deposits did not come to the surface at all was one of the clearest proofs that the filling had come from below, and that they would probably be able to follow those deposits to a very great depth. The fact that the deposits were permanent was of very great importance to the future of the country, and he agreed with Mr. Woodward that some of the mines on the Hannan's field bid fair to become the most phenomenal gold mines in the world.

Mr. Woodward appeared to have overlooked the fact that in other parts of Western Australia there were very similar districts to Hannan's, and he anticipated that in the near future other centres would be developed which might rival the Hannan's field, which had had more energy and capital expended on it owing to its close proximity to Coolgardie. If such turned out to be the case, it seemed likely that within the next five years the colony of Western Australia would be producing gold to an enormous extent. He believed they were on the eve of a gold production which would eclipse anything they had yet seen. It was to be hoped that this production of gold would cause a general improvement in every kind of business and enterprise throughout the world, and, if so, they might look forward to a period of great commercial activity; in any case he thought there would be no occasion for a second metal as a medium of exchange.

He observed that the map of Hannan's, which was exhibited by Mr. Daly, was a very useful and valuable one. He had not seen anything which so clearly set out the position of the various workings of the rich portion of Hannan's. He thought if the Institution could secure a copy, it would be of very great value for reference, as there was nothing of the kind at present existing in London.

**Dr. Woodward** said that he wished to return thanks on behalf of his son for the kind manner in which the paper had been received by the members. It seemed to him that the occurrence of gold at Hannan's indicated a decomposed rock, but it was difficult to say whether it was a lode or not, although it was quite clear from the paper that the deposit had not got the true indications of a lode, seeing that it faded away into the country and was not distinct from the surrounding rocks. If the deposit was at all like the specimens which he had placed on the table, he should say that it was a decomposed rock with the gold disseminated

Digitized by Google

through it in a very casual manner, and not with any continuity. He could not agree with the author when he stated that there was no indication of water action, and yet he spoke of atmospheric agency which had changed the rocks for a distance below the surface. If the country rock had been exposed for a long period to atmospheric agency it must have been exposed to other agencies as well. He submitted that there was no such thing as a rainless district, and even in areas in rainless West Australia there were times when the rain was pretty plentiful for a short period, and the fact that the water sunk into the ground where it could, combined with the action of the wind and sun, it must affect the exposed surfaces. In the specimens he had placed before them from another area, namely, from Two Brothers' Reef, Southern Cross, and Yilgarn, it would be noticed that there was every indication of a ruined rock; there was alumina and quartz separated and broken up, and unless some chemical action be assumed, what could have distributed the gold in that finely divided state except water? It only remained for him to repeat his thanks for their kind appreciation of his son's paper, whom he regretted was not present personally to explain his views.

**The President** remarked that there was no doubt that the hydrothermal action, spoken of by Dr. Woodward, had played a very great part in Western Australia, and the diorite rock, which formed the country rock, was exceptionally easily decomposed by acidulated waters rising up. He thought that the traces of such action were so exceedingly distinct that it was beyond argument that such was the case.

**Mr. S. Herbert Cox** considered that the paper was a very able one although he did not agree with all that the author stated. With regard to the alluvial, although this was in some places very rich, and large nuggets had been found, it was really what would be looked upon as surfacing in other parts of the world, and he did not think the gold had travelled to any great distance. As to the dykes, there was no doubt that they existed in the district, but up to the present time their course had only been determined in a few cases. It was not easy on the fields to distinguish between the actual dyke rocks and the hornblendic schists which constituted the greater part of the country; the hard rocks had weathered in places into deep channels, which formed underground water courses, and the hard undecomposed rocks formed ridges, but the rocks were generally buried beneath 30 or 40 ft. of surface soil, and there was no possibility of tracing the geological structure of the country on the surface. With regard to the lodes, it seemed

Digitized by Google

to him that in the cases of the Great Boulder, the Ivanhoe, the Lake View, and perhaps the Brownhill, the lodes were as true as in any part of the world. They had been proved for a considerable length, and the shoots of gold were by no means inconsiderable; they extended for hundreds of feet along the course of the vein, and appeared to have a regular pitch to the south in the lode. While, however, there were lodes of that description, there were a great many deposits throughout Hannan's and other parts of the country which Mr. Woodward accurately described: they were nothing more than masses of rock more or less decomposed in which stringers of quartz occurred carrying a certain amount of gold. Sometimes these veins were rich, but when the whole decomposed formation was taken into consideration they were exceedingly poor. Mr. Moreing had said that the fact of the lodes not coming to the surface was a proof of their filling from below; this was probably the case, but the mere fact of their not appearing on the surface was probably due to the covering of cement. There were, however, certain instances in which ore had not been met with in cross-cutting at the 100-ft. level, and yet at a lower depth ore had been found. In those cases it certainly looked as if Mr. Moreing's suggestions were correct.

**Mr. Moreing** remarked that in some instances they had only reached the ore at 300 ft.

**Mr. Cox**, continuing, said that with regard to the Mount Morgan Mine, he thought it was as rich as anything which had been discovered at Hannan's, although at the present moment it was not turning out the same quantity of gold as formerly, but for a long time it yielded 5 oz. to the ton, and he did not know that they were doing better than that at Hannan's. The point he wished to emphasise in connection with the paper was, that he considered that the lodes in the well-known mines were true permanent lodes, and were quite distinct from the so-called "lode formations" so widespread throughout the country.

**Mr. Moreing** observed that with regard to the comparative richness of Mount Morgan and the Hannan's Mines, the average richness at the Brownhill up to recently was 6 oz. 15 dwt., and the Great Boulder for months consecutively averaged 10 oz. Personally he did not believe there were any other mines which had such large amounts of high grade ore as at Hannan's.

**The President** remarked that when he was in the district there was a level in the Brownhill where the formation gave 59 oz. to the ton.

**Mr. H. J. Daly** then proceeded to point out on a map of the

Digitized by Google

Hannan's district, which he had prepared, the better known mines and the principal lodes which traversed them.* He remarked that in the Ivanhoe there were three lodes, the middle one of which had been driven on for 900 ft. in the Ivanhoe, 200 ft. in the Golden Horseshoe and 400 ft. in the Great Boulder, while it also continued into the Boulder Main Reef. He thought that might be described as the main Ivanhoe lode. There was another reef in the Ivanhoe mine known as the Eastern lode, which was very rich and averaged 3 oz. to the ton, the width being from 8 to 17 ft.; it had not, however, been worked below the 100 ft. level. One of the remarkable features of the district was a lode which trended from the Great Boulder to the Golden Horseshoe, and thence back again to the Great Boulder; it was 20 ft. wide and the average assay value was 3 oz. to the ton. In several cases on the field it happened that although there were no surface indications the reefs had been proved to within 2 or 3 ft. of the surface. Another very rich lode was to be found in the Boulder Perseverance, although it had not been much worked upon and was only proved for a few feet. The Lake View Consols had the longest lode on the field, and had been proved for a length of 1½ miles in a longitudinal direction. A curious feature of the district was Australia Hill, where hard diorite rocks came right up to the surface, although in the flat country diorite was not met with until a depth of 200 ft. had been reached. The lode in the Hannan's Brownhill was 75 ft. wide, and 1,000 tons had been smelted for a yield of nearly 11 oz. to the ton. With regard to cross cutting, he was of opinion that it was usually more disappointing than profitable, although in the South Kalgoorlie it had been successful. He thought that they had to congratulate Mr. Woodward on having put the case very clearly before them, although he (the speaker) did not think he was quite right as regarded the manner in which the lodes had been formed. He understood that the formations had been proved to a little over 300 ft.

**The President** thought the discussion had been a very interesting one, but he noticed there was a tendency to imagine that there was only one form of lode in the Hannan's district, and he did not think the author intended to convey that impression. There were certainly two clearly distinct types of veins in the district, viz., quartz veins and so-called formation deposits. The latter had hitherto been proved to be much the richer of the two, and had to

* A copy of the map has since been presented to the Institution by Mr. Daly.

Digitized by Google

a large extent overshadowed the former, but to the north of Kalgoorlie there were very distinct quartz lodes.

Another point was that those formation deposits did not show regular walls, and were, therefore, taken to be different from the ordinary lode formation. The country rock in which they were found was of an easily decomposed character, and in the case of hydrothermal springs passing up through the fissures, the action upon what would have been the walls of the lode had been such as to render it part and parcel of the vein matter. The junction of what would be the lode and the country rock was by no means distinct, and he thought that was the explanation of the matter. He concluded by expressing his thanks to Mr. Woodward for his able paper.

**Mr. Claudet** then read the following paper:—

Digitized by Google

## "Notes on the Sampling of Argentiferous and Auriferous Lead, with Diagrams illustrating the Unequal Distribution (Segregation) of the Precious Metals."

By Arthur C. Claudet, M.Inst.M.M.

The author has found, in common with others, that different parts of the same bar of lead carrying silver or gold vary very much in their contents of these metals, and he proposes to show in these notes with the aid of the annexed diagrams how this may affect the sampling of argentiferous and auriferous lead bullion on a large commercial scale. This matter is of considerable importance, owing to the large quantities of lead bullion imported to this country to be sold to the lead refiners. The ordinary methods of sampling practised in this country are as follows:—

1. Cutting chips out of the tops and bottoms of the bars.
2. Sawing, by a circular saw, through the bars.
3. Melting the bars in mass into clean lead and dross.

1. Chips by a gouge or chisel are cut out of the top and bottom of every bar, or alternately the top of one bar and the bottom of the next. These chips are then melted, either together into a small bar, or all those from the tops and bottoms separately into two bars. These bars are assayed, and the result compensated for enrichment on melting, if necessary.

2. Every bar is either sawn right through transversely or half way through each bar as far as possible in a different place. The sawings are assayed, and, as oil has to be used, either melted before assay into small bars, or assayed without melting, and the result compensated for in the latter case for impoverishment due to the contained oil.

*Sawing* is done by a circular saw, operated of course by steam power, and the teeth should be rather small, firstly to prevent too frequent breakages, and secondly to produce small sized sawings.

Digitized by Google

With plenty of men available for handling the lead bars, 120 tons may be sawn per 12 hours, each bar right through.

3. The lead is melted in large iron pots capable of holding 10 to 30 tons of lead, the charge is heated and skimmed until the mass of lead in the pot is quite clean; the temperature is then raised as high as possible, the lead well stirred up, and a "dip" sample taken. The dross amounting to from 1 to 5 per cent., according to the impurities in the lead, and the efficient treatment, is broken down when cold, and a sample drawn.

For example:—

| | Tons | cwt. | qr. | lb. |
|---|---|---|---|---|
| Charged into pot .. .. .. .. | 15 | 0 | 0 | 0 |

| | Tons | cwt. | qr. | lb. | | | | |
|---|---|---|---|---|---|---|---|---|
| Clean lead.. .. .. | 14 | 5 | 0 | 0 | | | | |
| Dross .. .. .. | 0 | 15 | 0 | 0 | | | | |
| | | | | | 15 | 0 | 0 | 0 |

*Pot Sampling.*—With large pots 24 tons may be melted, drossed, and sampled per 12 hours. The number of pots required to compete with sawing at the rate of 120 tons per 12 hours would of course be five.

The clean lead dip sample is assayed and also the dross sample, and the results corrected and carried out on the original lead charged into the pot according to the respective weights of the two products.

The dross contains from 80 to 95 per cent. lead as a rule.

This method takes the longest time, but in the opinion of the author yields the most reliable results of all three systems.

*System* 1 should only be practised on lead containing a silver value of, say, 10 oz. to 20 oz.

*System* 2 can be satisfactorily used in lead carrying silver up to 100 oz. or 200 oz. per ton.

*System* 3 should be employed in all cases where the silver is above 200 oz. per ton, and always where gold is present to the extent of above 1 or 2 oz. per ton.

*Chip sampling* is the quickest of all methods provided one chip only is taken from each bar; if each bar is chipped top and bottom, it is not so quick as sawing.

Sawing is done only during the day, but pot sampling during the night as well, so that it is possible for three pots to suffice for the sampling of 120 tons of lead in 24 hours. The expense of course is greater than in the case of sawing.

The surface of a bar is, as a rule, poorer in silver and gold than

Digitized by Google

the bottom, but when the gold contents become high the reverse appears to be the case.

*Explanation of Diagrams.*—Each diagram shows an exaggerated perspective view of a bar cut by sawing into parts transversely: the sections are shown as if moved away from each other for the sake of clearness in showing the assay values. The red line shows the bar cut longitudinally. The faces exposed by the sawing have been sampled at the places indicated by the shaded portions, and the assay of the silver is given in black figures, and that of the gold in red. In some of the cases analyses were made of the sawings, but not in all. Some of the bars were sampled differently to others.

In all cases the bottom parts of the bars were found very poor in copper, almost free in fact, but the top parts, along the longitudinal surface cut, were much richer in this metal, showing that this metal was also very unequally distributed in the bars.

The bars shown in the diagrams represent lead from South Australia, Queensland, Mexico, Greece, and South America.

The bars are approximately 24″ × 5″ at the top, 20″ × 3″ at the bottom, and 3½″ to 4″ in depth. Weight about 80 to 110 lb.

Some of the above bars were cleaner from dross than the others, but no special selection was made for these experiments; in most cases an average bar was taken.

No bars poor in silver were examined, that is, running from 10 to 20 oz. per ton, as it was supposed that segregation would be within the limits of the amount agreed to be divided and that of the accuracy of assaying.

It may be interesting to compare the sampling of various parcels of silver lead by different methods.

COMPARISON BETWEEN SAWING AND POT SAMPLING AND THE PRECIOUS METALS (GOLD AND SILVER) ACTUALLY RECOVERED BY REFINING.

| Tons | cwt. | qr. | lb. | | Colonial assay. oz. | Sawings. oz. | Recovered. oz. |
|---|---|---|---|---|---|---|---|
| 2 | 13 | 0 | 0 | gold | 1,305 per ton. | 1,224 per ton. | 1,261 per ton. |
| | | | | silver | 296 „ | 305 „ | 296 „ |
| 6 | 0 | 0 | 0 | gold | 342 „ | — | 340 „ |
| | | | | silver | 102 „ | — | 99 „ |

In this last parcel two lots of 1 ton each were sawn separately and then pot sampled with the following results:—

Digitized by Google

| | Sawings. oz. | Pot. oz. |
|---|---|---|
| Lot 1, about 1 ton, gold..... | 308 per ton | 312 per ton. |
| „ 2 „ 1 „ „ ..... | 332 „ | 329 „ |

COMPARISON BETWEEN SAWING AND POT SAMPLING. SILVER.

| Tons | cwt. | qr. | lb. | Sawings. oz. | dwt. | gr. | | Pot sampling. oz. | dwt. | gr. | |
|---|---|---|---|---|---|---|---|---|---|---|---|
| 19 | 4 | 0 | 0 | 120 | 4 | 0 | per ton | 119 | 16 | 0 | per ton. |
| 22 | 14 | 0 | 0 | 132 | 10 | 0 | „ | 131 | 2 | 0 | „ |
| 25 | 10 | 0 | 0 | 127 | 8 | 0 | „ | 125 | 8 | 0 | „ |
| 18 | 16 | 0 | 0 | 127 | 11 | 0 | „ | 126 | 2 | 0 | „ |
| 68 | 7 | 0 | 0 | 72 | 4 | 0 | „ | 70 | 16 | 0 | „ |

COMPARISON BETWEEN CHIP AND SAWING SAMPLING. SILVER.

| Tons | cwt. | qr. | lb. | Chips. oz. | dwt. | gr. | | Sawings. oz. | dwt. | gr. | | Foreign chips. oz. | dwt. | gr. | |
|---|---|---|---|---|---|---|---|---|---|---|---|---|---|---|---|
| 13 | 5 | 0 | 0 | 114 | 4 | 0 | per ton | 116 | 4 | 0 | per ton | 120 | 4 | 0 | per ton. |
| 12 | 4 | 0 | 0 | 104 | 16 | 0 | „ | 107 | 15 | 0 | „ | 110 | 13 | 0 | „ |
| 12 | 14 | 0 | 0 | 132 | 18 | 0 | „ | 136 | 5 | 0 | „ | 140 | 13 | 0 | „ |
| *12 | 17 | 0 | 0 | 135 | 13 | 0 | „ | 135 | 10 | 0 | „ | 137 | 15 | 0 | „ |

---

At the conclusion of the reading, **Mr. Claudet** said that his chief object in placing the paper before them was to draw attention to the great variation which occurred in gold and silver in lead bars, and the difficulties which such variations placed in the way of accurate sampling. The only absolute and certain method of sampling was by the pot system. It would be seen from the diagrams what enormous variations occurred at the top and bottom of the bars, and therefore if the chipping system was adopted, and one chip taken at the top and another at the bottom it was impossible to get a proper average. The chipping system was generally used in the colonies, and the results, as a rule, were far too high, and therefore one would imagine that the chips had been taken from the rich side, thus raising the average. With regard to sawings, it was impossible to sub-divide them, and it became a matter of mixing. In the case of an ore they crushed it

| | oz. | dwt. | gr. | |
|---|---|---|---|---|
| * Top chips ..... | 130 | 10 | 0 | per ton. |
| Bottom chips.... | 140 | 16 | 0 | „ |
| Average ..... | 135 | 13 | 0 | |

Digitized by Google

SKETCH PLAN SHOWING HOW THE BARS WERE SAWN LONGITUDINALLY AND TRANSVERSELY, WITH APPROXIMATE DIMENSIONS.

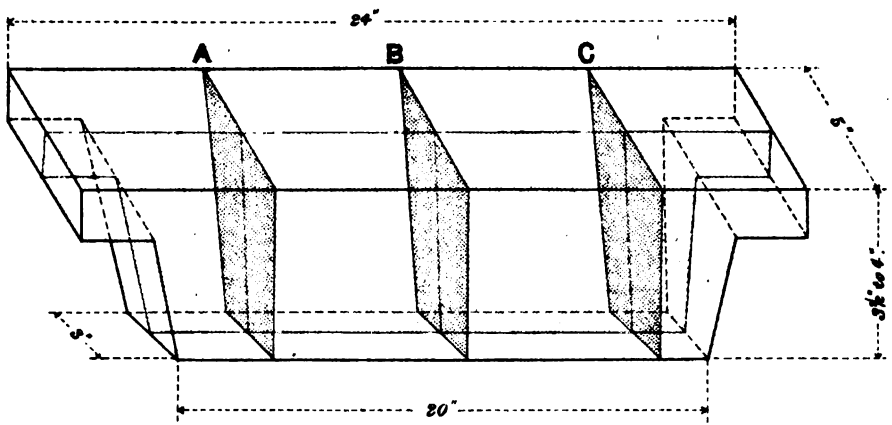


*Weight of Bar, from 80 lbs to 110 lbs*

Harrison & Sons, Lith., St. Martins Lane, W.C.

Digitized by Google

Digitized by Google

GOLD.

Average A, B, C. 36·4

## No. 1.
## ARGENTIFEROUS AND AURIFEROUS LEAD BAR.

A. 36·2 B. 36·9 C. 36·2

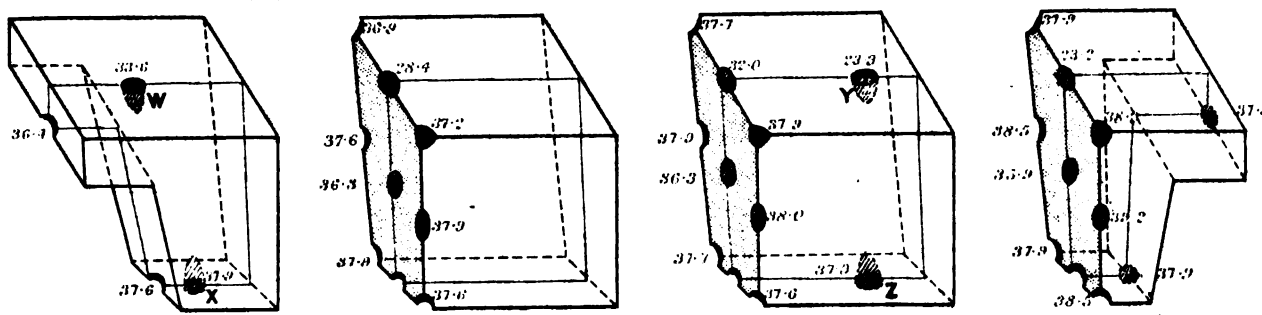


**ANALYSIS OF TRANSVERSE SAWINGS:-**

| | |
|---|---|
| *Copper* | ·16 |
| *Antimony* | ·11 |
| *Arsenic* | ·12 |
| *Iron* | ·02 |
| *Silver & Gold* | ·3135 |
| | ·7295 |
| *Lead (by diff.)* | 99·2765 |
| | 100·0000 |

| | TRANSVERSE SAWINGS. oz. | LONGITUDINAL SAWINGS. oz. |
|---|---|---|
| GOLD | 36·40 | 35·80 |
| SILVER | 66·00 | 65·50 |

CHIPS.

| W—X oz. | Y—Z oz. |
|---|---|
| 35·7·5 | 30·6 |

oz.
33·2

NOTE:- *The Gold contents only are given in the above diagram. The figures represent ounces per ton.*

Harrison & Sons, Lith. 3 Martins Lane, W.C

Digitized by Google

Digitized by Google

## No. 2.
## ARGENTIFEROUS LEAD BAR.

**SILVER.**

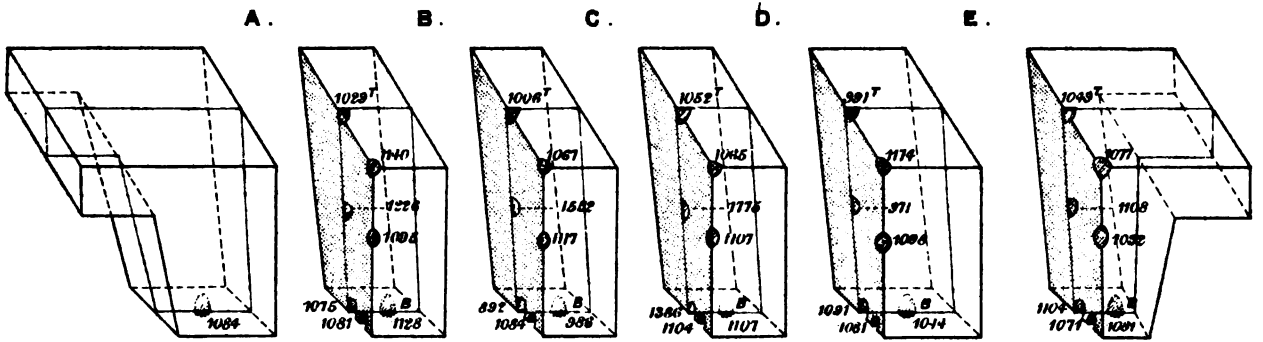


### ANALYSIS OF SAWINGS; TRANSVERSE CUTS.

| | | | | |
|---|---|---|---|---|
| *Copper* | 2·00 | | | |
| *Antimony* | ·57 | | | |
| *Arsenic* | ·18 | | | |
| *Iron* | ·08 | | | |
| *Silver* | 3·32 = | oz. 1084. | dwt. 10. | gr 0. per ton. |
| | 6·15 | | | |
| *Lead (by diff.)* | 93·85 | | | |
| | 100·00 | | | |

*Top Chips* ..... T – 1025
*Bottom Chips* ... B – 1069
*average* – 1047

| A. | B. | C. | D. | E. | average. |
|---|---|---|---|---|---|
| oz. | oz. | oz. | oz. | oz. | oz. |
| 1074 | 1120 | 1248 | 1068 | 1074 — | 1117 |

NOTE. The figures represent ounces per ton.

Digitized by Google

Digitized by Google

No. 3.
## AURIFEROUS LEAD BAR.

GOLD.

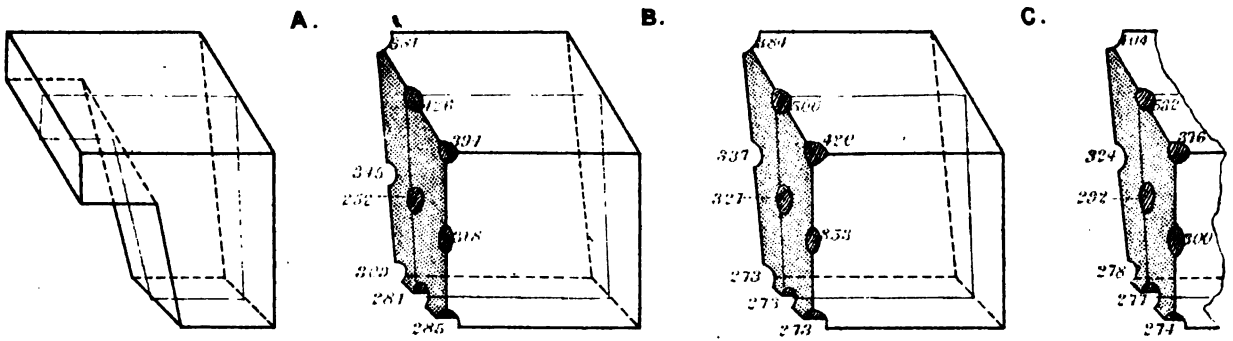


| | |
|---|---|
| A | 332 |
| B | 349 |
| C | 340 |
| *Average* | 340 |

**NOTE**. *Silver not determined; about 100 oz. per ton.*

Harrison & Sons, Lith. St Martins Lane, W.C.

Digitized by Google

Digitized by Google

No. 4.
ARGENTIFEROUS LEAD BAR.

SILVER.

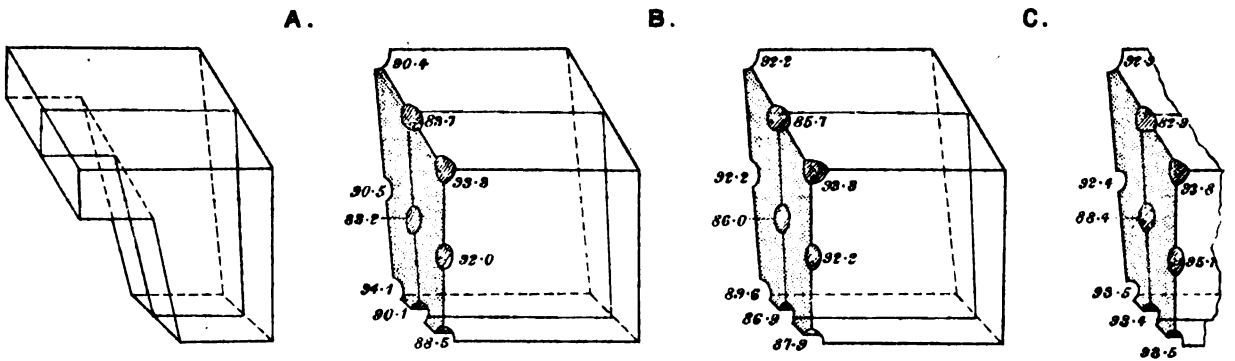


| | |
|---|---|
| A..... | 89·5 |
| B..... | 89·6 |
| C..... | 91·8 |
| *Average* | 90·3 |

Harrison & Sons, Lith., 3, Martins Lane, W.C.

Digitized by Google

Digitized by Google

SILVER.

No. 5.

## ARGENTIFEROUS LEAD BAR.

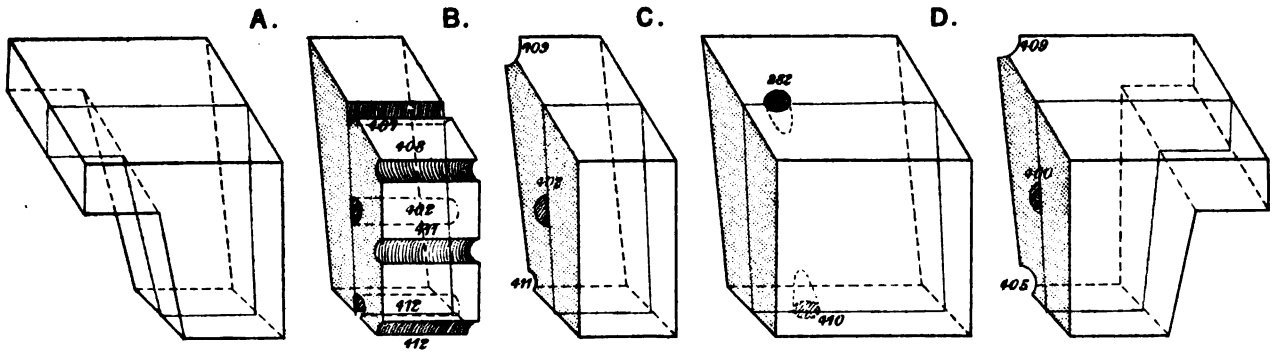


| SILVER. | oz. |
|---|---|
| Sawings | 404·5 |
| Chips (Average of 2) | 396·0 |

| | |
|---|---|
| A | 409 |
| B | 407 |
| D | 405 |
| Average | 407 |

Harrison & Sons, Lith., St Martin's Lane, W.C.

Digitized by Google

**SILVER – GOLD.**

**No. 6.**

**AURIFEROUS ARGENTIFEROUS LEAD BAR.**

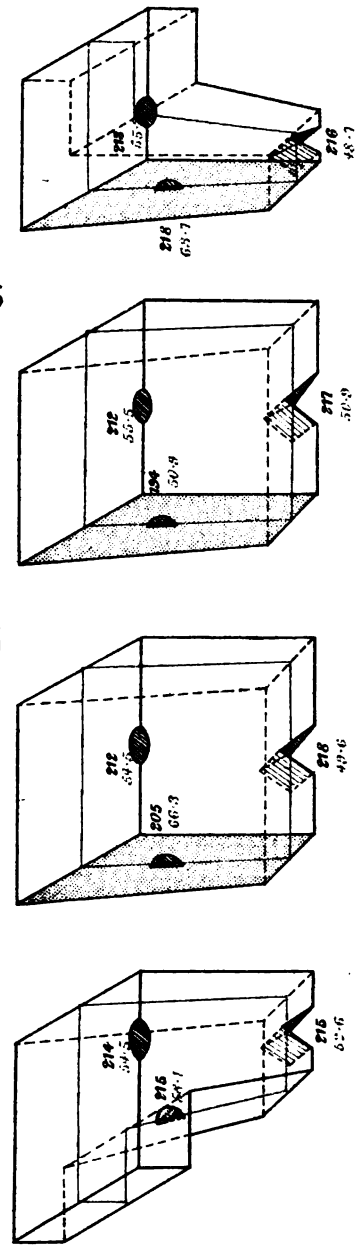


Digitized by Google

Digitized by Google

No. 7.

## AURIFEROUS ARGENTIFEROUS LEAD BAR.

**SILVER**—GOLD.

A.

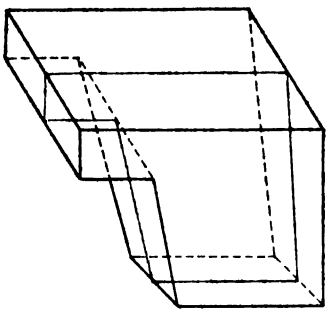

B.

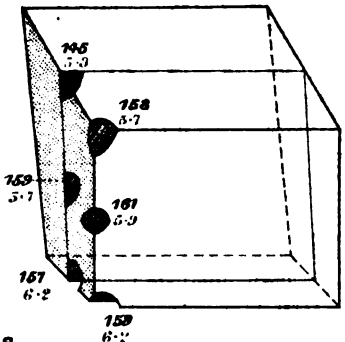


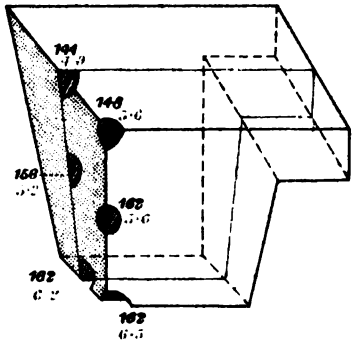


### ANALYSIS OF TRANSVERSE SAWINGS.

| | |
|---|---|
| *Copper* | ·65 |
| *Antimony* | ·82 |
| *Arsenic* | ·04 |
| *Iron* | ·08 |
| *Tin* | ·15 |
| *Bismuth* | ·04 |
| *Silver & Gold* | ·4785 |
| | 2·2585 |
| *Lead (by diff.)* | 97·7415 |
| | 100·0000 |

### TRANSVERSE SAWINGS.

| | oz. |
|---|---|
| SILVER | 150·9 |
| GOLD | 5·4 |

| | SILVER. | GOLD. |
|---|---|---|
| A | 156. | 5·83 |
| B | 155 | 5·67 |
| Average | 155½ | 5·75 |

Harrison & Sons, Lith., St. Martins Lane, W.C.

Digitized by Google

Digitized by Google

## No. 8.
## ARGENTIFEROUS LEAD BAR.

SILVER.

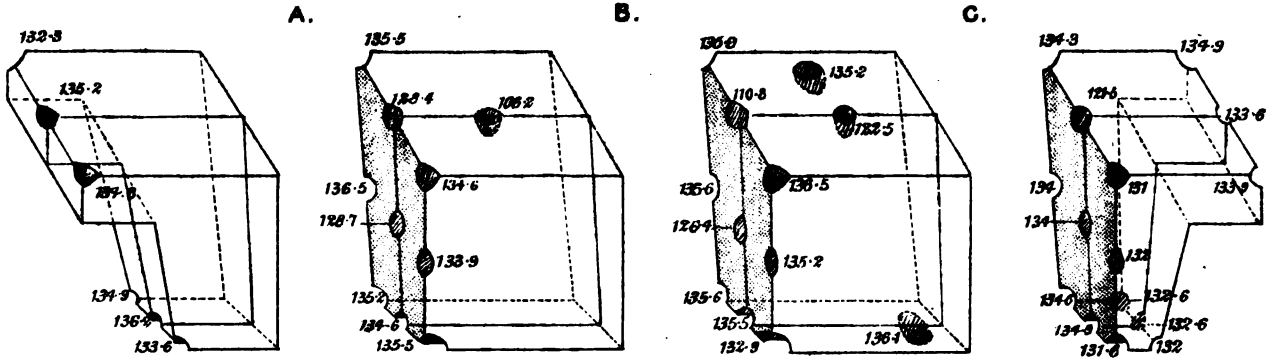


### ANALYSIS OF TRANSVERSE SAWINGS.

| | | | |
|---|---|---|---|
| Copper | ·25 | | |
| Antimony | ·03 | | |
| Arsenic | ·58 | oz. | CHIPS. oz. |
| Silver | ·395 | = 129·45 | 135·65 |
| | 1·255 | | |
| Lead (by diff.) | 98·745 | | |
| | 100·000 | | |

| | |
|---|---|
| A. | 133·6 |
| B. | 131·6 |
| C. | 132·0 |
| Average | 132·4 |

Harrison & Sons, Lith., St. Martins Lane, W.C.

Digitized by Google

Digitized by Google

to a certain extent, took a proportion, crushed it fine, and so on, but sawings could not be treated in that manner. One method, for the poorer qualities of lead, was to place four bars on top of one another, and saw them across, and take a sample from each bar at the point of intersection. Such a system might work on the lower quality silver lead, but, in the case of gold, sawing should not be trusted; it was a quick method, but uncertain, especially as the lead which was now coming to this country in large quantities from South Australia had been smelted with the rich Hannan's ores, of which they had heard that evening.

On reference to diagram No. 1, at points Y and Z, they would see how difficult it was to arrive at an average.

Diagram No. 2 showed a bar of very rich silver lead, going about 1,100 oz. to the ton. In the section between B and C the variation would be found to be enormous, being 986 at the bottom and 1,552 oz. at the centre.

The bar illustrated in diagram No. 3 was much richer in gold than that shown in No. 1, and the variation was still more marked. In that case, however, instead of the bottom being the richest portion, it was the top.

Diagram No. 4 illustrated a silver bar, averaging 90 oz., and it would be noticed that the outsides of the bar were richer than the centres.

Diagram No. 5 showed a bar which had been sampled in a different manner, and the results were closer.

It would be seen that in diagram No. 6 the gold contents were again greater at the top and poorer at the bottom.

The bar shown in diagram No. 7 contained only an average of 5 oz., but very great differences would be observed.

Diagram No. 8 showed a bar of lead, which at one time came in large quantities to this country, and of which he had made an exhaustive test. It would be seen that enormous variations occurred, and great differences would be noticed between the centre and the outside of the bar.

---

## DISCUSSION.

**Mr. Charleton** considered that they were indebted to Mr. Claudet for a very instructive paper, which could not fail to be of use for future reference. It was a subject upon which he personally knew but little, but a friend of his some time ago had sent



Digitized by Google

him some voluminous notes bearing on the question, which bore out in a striking manner all that Mr. Claudet had stated, and in addition went into details which the author had not touched upon. As he had not received authority to publish his friend's communication, he could, until hearing from him, only read the following general remarks on the subject:—

With regard to sampling his friend appeared to use the Clarkson Sampler for sampling the saw-cuttings, and it seemed to give extremely good results. As to taking dip samples, the writer agreed with Mr. Claudet that this was the most accurate of the three methods.

**Professor Huntington** desired to emphasise the value of Mr. Claudet's paper, which, although short, represented a large amount of solid, hard work. The diagrams themselves had taken a considerable time to prepare, and he thought that the Institution was greatly indebted to the author for placing them before the members. Such information was extremely difficult to get, and of great value to those who had to deal with such matters.

**Mr. Rickard** thought it was a pity that Mr. Claudet had not indulged their curiosity by pointing out what was the cause of the remarkable phenomena described in the paper. He was of opinion that there was perhaps a fourth method of sampling the bars; instead of gouging along the surface it might be better to bore right through.

**Mr. Alfred James** said that he was much interested in the subject, and had given it some attention in order to find out whether it was possible to avoid the discrepancies pointed out by the author. He understood that Mr. Matthey had also had the matter under consideration, but Mr. Claudet had brought it forward publicly at one of their meetings, and it had engaged considerable attention, particularly in Africa. The point he would like to have information about was as to how the sampling should be done. Mr. Claudet's sampling was very good, but the gold recovered came far nearer the colonial assay than the sawing or pot methods, the figures being—Colonial assay 342, sawings 303, pot 312, while the gold recovered was 340; so although the colonial assay was 2 oz. too high, the sawings were too low by 37 oz.

**Mr. H. T. Barker** said he had been greatly interested in Mr. Claudet's paper, and in the diagrams with which it was illustrated. He had had great experience in the first two methods of sampling pointed out by the author, viz., chipping and sawing, and was quite convinced that sawing was far better than chipping. In addition to chipping at the top and bottom of the bars, bullets were some-

Digitized by Google

times cast, and he had found that while the chips taken from the bottoms were considerably richer than those taken from the tops, the bullets were richer than either, and in that case an average of the three—tops, bottoms, and bullets—would be taken.

He agreed with Mr. Claudet that the dip system was far superior to any other method. He was not aware that it was generally adopted, but considered it was the best way to arrive at a fair estimate of the bulk.

The figures given by Mr. Claudet were most interesting, and he noticed that in the comparison of sawing and pot assay given by the author, the colonial assay was given as 1,305, sawings 1,224, and the gold recovered 1,261 ; as the average of the first two was 1,264½, he thought it compared very favourably with the actual amount of gold recovered.

**The President** said that it might not be known to the members that a good deal of work of the same class had been done by Professor Roberts-Austen, who had found the same difficulty in connection with sampling gold bars, and had made an elaborate series of experiments, the results of which had been published, he believed, in the *Proceedings of the Royal Society*. The same results were found with the gold as Mr. Claudet had found with the gold, silver, and lead. He thought a comparison of these results might be interesting to the members. They would be found in the *Proceedings of the Royal Society* some 12 or 15 years ago.

**Mr. Claudet**, in reply to Mr. Rickard, said that boring from top to bottom would be subject to even greater objection than chipping, and would take a much longer time. It all depended upon where the bar was bored. As the diagrams had shown, the variations were so great all over the bar that it was best to use the only absolutely certain method—dipping. As to the reason for the variations, he had an open mind on the subject, and did not attempt in the paper to put forward any theories. The questions of temperature, rate of cooling, and the proportion of the precious metals in the lead, all had their bearing on the subject, and it was impossible to formulate a rule to go by.

With regard to the system of dipping, the ladle had to be perfectly hot, and the lead moved up and down by the ladle and thoroughly mixed. The lead was then poured quickly into the bullet moulds, and if it cooled sharply differences would not occur.

As to Mr. James's remarks, no comparison could really be made. The 6-ton parcel was divided up into six 1-ton lots, the



Digitized by Google

colonial assay being 342, and the gold recovered being 340. The colonial assay was therefore better by 2, but two of the six lots, before the gold and silver were recovered by refining, were sawn and potted to see the difference. The two could therefore not be compared. There was no pot sampling of the 6-ton lot, as they thought it best to refine it.

**Mr. Charleton** remarked that it occurred to him that it might perhaps be better to use a borer, such as was used for sampling gold bullion, so as to bore a little distance into the bar, and equalise the quantities. He did not suggest it was a better method than dipping, but presuming the chip system was used he suggested a borer might be used with advantage; he thought better results would be obtained than by chipping in the ordinary way, as it would enable the quantity of bullion taken from each part of the bar to be more easily equalised in amount, than by chipping it.

**Mr. Claudet** stated that what he had endeavoured to point out was that chipping was a bad system, as was also other methods of sampling of a similar nature, such as boring or gouging, but as to the relative merits of chipping and boring he thought it was only a question of time. He considered that it was quicker to use a chisel and hammer than to bore into a bar. He wished it to be distinctly understood that what he had stated in the paper was his own experience. He considered that the diagrams were the most important part of the paper, because they clearly demonstrated the serious variations which occurred, and to his mind showed plainly that it was best to bring the lead into a fluid condition before taking samples.

**Mr. Ernest A. Smith** said he had listened with great interest and profit to the valuable contribution of Mr. Claudet. The results of his experiments were of extreme interest, as they confirmed the work of other investigators on the subject of segregation in connection with argentiferous and auriferous lead. Levol in 1854 experimented on lead containing small quantities of the precious metals, and showed that the latter were driven towards the centre of the mass during solidification. Recent experiments by Kaht* and those submitted by the author have, however, somewhat modified this conclusion, and proved that the silver and gold also frequently tend to concentrate in the lower portion and sides of the mass.

The laws which govern the distribution of the various constituents in a cooling mass of mixed metals do not at present admit of clear definition, and much work has yet to be done in connec-

* *Mineral Industry*, vol. iii, 1894, p. 414.

Digitized by Google

tion with lead bullion before the molecular changes which take place on cooling are thoroughly understood.

Recent research has shewn that a solid mass of metals of this description is a mixture of solidified solutions of the metals in each other.

On looking over the assays of the various sections of lead bars given by the author, it is interesting to note that in bars Nos. 4, 5, and 8, in which the silver ranges from 90 to 400 oz., the silver has concentrated to the bottoms and sides of the bars, while in bar No. 2, containing an average of 1,050 oz., the silver has concentrated to the centre of the mass of metal.

With the auriferous bars also the same differences in the zone of concentration are seen, for example in bar No. 1 containing 36 oz., the gold has concentrated at the bottom and sides, while in bar No. 3 containing an average of 340 oz. of gold, the excess of precious metal is found at the surface. These conditions appear to be slightly modified when both silver and gold are present in appreciable quantity, thus in bar No. 6 we find the gold concentrated in the centre while the silver follows the general rule. With smaller quantities of gold, as in bar 7, this metal seems to be concentrated with the silver near the bottom and sides of the bar. It is well known that when a mass of mixed metals is cooling "the portion of the alloy which first solidifies rejects certain other portions of the constituent metals," thus giving rise to great irregularities in composition. Thus, when a mass of lead containing silver and gold is allowed to cool, certain alloys of these metals separate out or crystallise, while others are rejected. Whether the precious metals are driven outward or inward in the cooling mass is dependent, as shown by Mr. Claudet's results, on the quantity present in the mass, and it may be observed that the alteration in the zone of concentration appears to take place when the lead contains about 600 to 650 oz. of silver per ton, a degree of richness which marks the point at which it is necessary to stop the crystallisation in the well-known Pattinson process.

From the experiments by Raht it would appear that the uniformity in composition of commercial auriferous and argentiferous bar lead is not dependent, to any large extent, on the rate of cooling.

The presence of impurities, however, contained in the lead interferes with the crystallisation which takes place on cooling, and consequently affects the distribution of the precious metals. The metals usually present as impurities in bar lead always collect at the top of the bar on cooling, and it is interesting to note

Digitized by Google

that the atomic volumes of these metals and also of silver and gold are smaller than that of lead, and that the atomic volume of gold is the same as that of silver.

In dealing with material of this description in which the composition varies so much, the question of sampling becomes of great importance.

Although the methods of sampling mentioned by the author are those usually adopted in this country, a method by means of a punch has been adopted by many of the large smelting and refining works of the United States. The steel punch used is somewhat similar to a belt-punch, and so constructed that it gives a small rod of metal about an eighth of an inch in diameter. Five bars are placed in a row and punch samples taken diagonally across the row, the punch being usually driven half way through the bar in each case. The bars are then turned over, and a sample taken from the lower side of each bar along the opposite diagonal.

The cores thus obtained are melted and cast into a bar in the usual way, and then assayed.

This method has the advantage of being simple and quick, and is said to give satisfactory results. When adopting this method it is necessary that the punch be driven quite vertically into the bar, otherwise an incorrect sample will result. There can be no doubt, as stated by the author, that with proper care dip samples are the most reliable, and well repay the extra time required in taking them. This method, however, is liable to give incorrect results if attention is not given to the thorough melting of the metal and proper heating of the ladle used.

Experiments have proved that segregation is greatly minimised when the metal is cast into a mould which gives a plate of metal the thickness of which is small compared to the other dimensions, and this point should not be overlooked when remelting and casting the sample for assay purposes.

Considering the difficulties which frequently arise in estimating the true value of lead bullion on account of the irregular manner of sampling and the unequal distribution of the precious metals, it is somewhat surprising that some uniform method of sampling this material has not been arrived at. A movement similar to that initiated by Professor J. W. Langly, of Pittsburg, in 1888, which resulted in the general adoption of standard methods for the determination of carbon, &c., in iron and steel might be adopted with advantage, and would greatly facilitate the valuation of lead bullion.

---

Digitized by Google

## CONTRIBUTED REMARKS.

**Mr. W. Dewar.** The unequal distribution of the silver and the unsystematic manner of sampling has given some trouble in estimating the value of argentiferous and auriferous bullion. The *modus operandi* of sampling, *i.e.*, a sample truly representing the average composition of the whole, requires as much care and consideration as the ultimate analyses.

Mr. Claudet, in his paper, after very careful investigation, has given the best methods for the accurate sampling of base bullion. Though melting the bars and taking a dip sample therefrom may give the most reliable results; yet, after much experimenting on the subject, I give preference to sawing of the bars tranversely, either right or half through. Under the latter conditions the bars are much more easily handled, and no more accurate results are obtained by sawing right through. The saw method is not only cheaper, but much more expeditious. To the desilverizer it offers many facilities for economical working. As a general rule, on bullion assaying from 100 to 300 oz. silver per ton, the saw sample shows 1 to 2 oz. silver per ton over that obtained by the "dip."

The distribution of the silver changes with the manner in which the bars are cast, and where buyer and seller, in case of dispute, called in an umpire, I found it advisable and much more satisfactory to run a three-pronged bar—one for buyer, seller, and umpire respectively.

With the "dip" method it is essential that the ladle for withdrawing the sample should be at least as hot as the bullion, otherwise the metal sticks to the surface, and the sample obtained is low in silver.

Owing to the segregation of the precious metals it is evident that "chipping" presents many difficulties. Uniformity in weight of chips is of the greatest importance, as the bars of any one lot are bound to vary in richness. The chips from the top of a bar are, as a general rule, smaller than those obtained from the bottom, and it is customary to melt down top and bottom chips separately, take equal amounts from the resulting bars, and remelt into a final sample bar.

Chipping with American gouge and taking samples diagonally across top and bottom of each row of five bars compares very favourably with either the dip or sawn sample. Some time ago I had two lots of 25 tons each of Mexican lead sampled by the above-mentioned methods, and with the following results:—

Digitized by Google

| | Assay value. | |
|---|---|---|
| | Sample No. I. | Sample No. II. |
| I. Chipping.. .. | 209·00 oz. | 340·11 oz. |
| II. Melting .. .. | 209·10 „ | 340·80 „ |
| III. Sawing .. .. | 209·14 „ | 340·00 „ |

Out of a great number of experiments which I have conducted at different times on the distribution of silver in lead bullion I have found that the sides and bottoms, together with the lugs, *i.e.*, those parts which come into contact with the cold iron, are the richest parts of the bar, and also that the centre of the upper surface is generally the poorest.

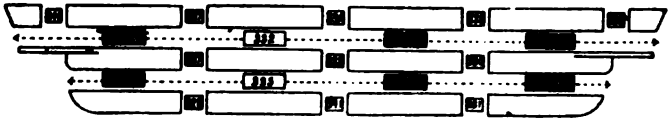

Fig. 1.

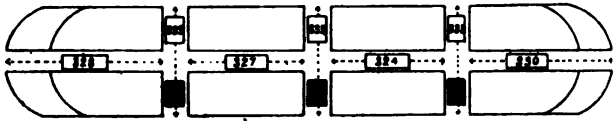

Fig. 2.

Fig. 1 represents a bar where two cuts parallel with the upper face were taken, and then sawn transversely as shown. The figures indicate assays of sawings, the dip assay of the bar gave 336 oz. Another bar giving a dip assay of 334 oz. was sawn through in three places, each piece sawn longitudinally at right angles to the upper face, see Fig. 2.

Without investigation one would imagine that the segregation would take place entirely according to the principle governing the Pattinson process, viz., that the lead congealed first would be the poorest in silver. I have often found such to be the case with bullion from a liquation furnace, which is tapped at as low a temperature as possible—the bottom of the bar being much poorer than the top. The moment the lead strikes the cold iron of the mould, crystallisation sets in, and the bullion is separated into a solid and liquid portion. The solid portion seems to force the molten lead into the lugs, where it finally sets much enriched in its silver contents.

Digitized by Google

If the bullion is very rich in copper the natural distribution of the silver is much disturbed. Segregation of silver takes place in other alloys, much similar to what is found in lead.

It does not appear that liquation is the falling out of the least fusible alloy in a mass of silver and lead, for if it were external portions of the alloy would in all cases be less rich in silver than the centre. A complete explanation of this molecular rearrangement is at present unknown, but the arrangement of an alloy is to a great extent dependent on the rate with which it is cooled.

**Dr. T. K. Rose.**—This paper is a valuable contribution to the study of the segregation of metals on cooling, the data obtainable from the diagrams being pre-eminently such as are most desirable to have on record. I offer the following remarks with much diffidence, as I have had no experience with auriferous or argentiferous lead except on the smallest scale. It would have been interesting to compare the American method of sampling lead bullion by drilling with the three methods described by Mr. Claudet. In the former system, holes are drilled through each bar, the results probably resembling those obtained by sawing.

Pot sampling is said by Mr. Claudet to be necessary when the lead contains more than 200 oz. of silver per ton. This method should be satisfactory so long as the silver is completely dissolved by the lead. Heycock and Neville* have shown that lead is saturated at its melting point with about 2½ per cent. of silver, or about 875 oz. per ton. At higher temperatures more silver would be dissolved, but it is probable that pot sampling would become less perfect when the silver exceeded, say, 1,200 oz. per ton. The solubility of gold in lead is far higher (the eutectic containing 13 per cent. of gold). It would be interesting if Mr. Claudet would compare his experience with these theoretical suggestions.

With regard to the diagrams, it is to be regretted that Mr. Claudet has been able to indicate scarcely any general laws on the distribution of silver and gold in lead. No doubt much depends on the amount of other base metals present and also on the conditions under which the bar is cast, and the laws are evidently very complicated. If the metal is cooled as far as possible before it is poured, then solidification proceeds during the casting, a number of successive layers solidified at different times are formed, and the chief segregation takes place in horizontal planes. Assuming this process to have happened to a limited extent in the experi-

* *Chem. Soc. Journ.*, 1892, vol. 61, p. 907.

Digitized by Google

ments under consideration, it appears that both gold and silver tend to move towards the outside of the bar, although from the richness of the lead eutectic in gold it might have been inferred that the centre of the bar should be enriched in this metal at least. Several exceptions to this rule, however, are shown in the diagrams.

**Professor Roberts-Austen** writes to say that he has read Mr. Claudet's paper with great interest. He is glad to find that work which was begun in 1852 by Levol, and continued in 1874 by himself (Professor Roberts Austen), has been so fully developed by the careful and accurate work of Mr. Claudet. All such work tends to confirm the view that alloys behave like ordinary solutions of salts, and enable the complex structure of many alloys to be understood.

**Mr. Claudet,** in reply to Dr. Rose's remarks as to the saturation of lead with silver, writes that since the reading of this paper, he has experimented with a 10 ton lot of lead, carrying more than 1,300 oz. silver to the ton. He operated as follows:—The pot contained a tap-hole at the bottom. The pot was kept hot the whole of the time during the discharging. Samples were taken at certain intervals, and the results were as follows:—

| | Silver. |
|---|---|
| At the commencement of running out .. | 1,345 oz. per ton. |
| When half empty..... | 1,335 „ „ |
| At the end of running out..... | 1,331 „ „ |
| Balance of lead left in pot..... | 1,330 „ „ |

The lead was not stirred in any way, but left perfectly quiet, and the temperature was the same at the beginning of the run as at the end of the run. The above assays show that there is no material difference in the richness of the lead at any time.

Digitized by Google

## SECOND ORDINARY MEETING, 17th November, 1897.

Mr. JAMES MACTEAR (*President*) in the Chair.

---

The minutes of the previous meeting having been read,

**The President** said that the first business was to read a paper on the South German Mine, which he had written with a view of putting on record a series of figures which would be useful for comparison with other mines. It had struck him at the time he visited this mine, the management and plant being so much better than was usually met with, that a few particulars would be interesting to the members.

### "Notes on the South German Mine, Maldon, Victoria."

By JAMES MACTEAR (*President*).

DURING a recent visit to Australia, the author had an opportunity of inspecting the South German Mine at Maldon, Victoria, and was much impressed with the results being obtained there. By the kind permission of Mr. W. B. Gray, he is enabled to place the detailed costs before the Institution, believing that they will be found well worthy of careful study.

The equipment of the plant is very complete, and the results obtained exceptionally good. The mine stands third on the official returns as a gold producer and also as a dividend payer, having returned to the shareholders no less than 58 per cent. of the gold produced.

The results, as given in the official returns, are for the year 1896:—

| | |
|---|---|
| New Chum Railway Mine ..... | 70 per cent. |
| Long Tunnel Extended ..... | 62 ,, |
| South German ..... | 58 ,, |
| Magdella ..... | 42½ ,, |
| Lord Nelson ..... | 35½ ,, |
| Long Tunnel ..... | 32 ,, |

Digitized by Google

The South German Mine has returned between July, 1882, and July, 1897, gold to the value of £301,471, paying £145,200 in dividends, and having in reserve £6,776.

The mine has been opened up to a depth of 1,455 ft., at which depth a level has been driven for over 720 feet. The shaft has now reached a depth of 1,493 ft., and is still being sunk.

The stone is hard and rock drills are used. About 6,000 tons of quartz were raised for the half year ending July, 1897 (the period covered by the statement of costs, from which the figures given in this paper have been taken). This has been obtained entirely from the lower levels of the mine, the quantities being:—

| Level. | Tons. |
|---|---|
| 860 ft. | 451 |
| 1,100 ,, | 586 |
| 1,200 ,, | 1,724 |
| 1,310 ,, | 1,960 |
| 1,455 ,, | 1,274 |
| Total | 5,995 |

The total yield of gold from this quartz was 7,188 oz. 18 dwt., or equal to 1 oz. 4 dwt. per ton. The tailings gave of this equal to 2 dwt. 7 gr. per gross ton. The concentrates gave equal to 6 oz. 1 dwt. 21 gr. per ton.

The mine is equipped with 30 stamps of colonial make. These crush about 1,000 tons of stone per month, for a yield of from 1,100 to 1,200 oz. of gold. As the stone carries a good deal of pyrites, blanket strakes are extensively used and do good work.

The tailings are treated by the cyanide process. The plant for this purpose is well designed, and reflects much credit on Mr. W. B. Gray, the managing director of the Company. There are four lixiviation vats, each capable of treating 110 tons of tailings at each operation. They are built of wood and are 9 ft. deep and 25 ft. in diameter. The discharge doors are in the side, and are large enough to allow the wagons to run in on loose rails, so that they can be filled inside the vat. The time occupied by each operation is four days, counted from filling to filling. The solutions used are weak, the "strong" solution containing about 0·1 per cent. of cyanogen, and the "weak" solution containing about 0·06 per cent. The tailings are filled into the vats by Butters distributors, and the slimes have hitherto been run to waste, but plant for their treatment on the Deeble system is being erected, and will shortly be at work. Four more cyanide vats are being

Digitized by Google

erected with a view of obtaining a better extraction than hitherto.

The pyrites concentrates are treated by the chlorination process with great success, the extraction averaging about 97 per cent. The concentrates are first calcined in a mechanical furnace of the McDougall type, having eight circular beds, 6 ft. in diameter. The fireplace is at the side, and wood fuel is used. The furnace roasts from 18 to 20 tons per week. The chlorine is obtained from bleaching powder and sulphuric acid.

The precipitation of the gold is carried out in the same way both for the chlorine and cyanide solutions, wood charcoal being used in both cases. The charcoal is crushed to the size of peas or beans, and is contained in a series of small filters. These are constructed in a very simple way: a wooden box or tub, 12 in. in diameter, has a glazed drain pipe, 8 in. in diameter, inserted in it and stayed with a couple of crossbars. The crushed and sifted charcoal is filled into both the drain pipe and the space around it. A piece of wire gauze is placed over the charcoal to prevent its being carried over by the current of solution which is allowed to flow first into the drain pipe, after passing through which it rises up in the outer space and is allowed to flow on to another of the filters arranged in the same way. Four or six of these are used in series, and when the first is charged with precipitated gold it is removed and the second is made the first, a fresh one being added at the end. The final liquors are passed through a large box of charcoal, so as to catch any gold that may have escaped the filters. After washing, the charcoal is dried and calcined in a small furnace with as little draught as possible, the furnace being locked up during the operation. The calcined residue is melted in the usual way, and gives a very pure bullion. The entire cost of breaking out the quartz, raising, milling, cyaniding, chloridising, stores and firewood, amount to—

£1 6*s.* 9·64*d.* per ton,

an extremely low figure, when the size of the lode and depth of the workings are considered.

The lode shows a width of 2 ft. at the 1,450 ft. level; in other places it shows 4½ ft. and 6 ft., occasionally cutting out altogether.

The following tabulated statement gives the detailed cost of working for the six months ending July, 1897 :—

| | |
|---|---|
| Tons crushed ..... | 6,000 |

Digitized by Google

*Cost of Surface Work per ton of Quartz crushed.*

| | £ | s. | d. |
|---|---|---|---|
| Engine drivers | 0 | 0 | 7·80 |
| Stokers | 0 | 0 | 6·53 |
| Engineers | 0 | 0 | 5·46 |
| Bracemen | 0 | 0 | 4·37 |
| Manager assayer | 0 | 0 | 9·88 |
| Assistant assayer | 0 | 0 | 1·56 |
| Blacksmiths | 0 | 0 | 9·51 |
| Carpenters | 0 | 0 | 2·80 |
| Total per ton | 0 | 3 | 11·91 |

*Cost of Breaking, Driving, Trucking, and all Dead Work below, per ton crushed.*

| | £ | s. | d. |
|---|---|---|---|
| Labour below ground | 0 | 9 | 0·63 |

*Cost of Treatment per ton of Quartz crushed.*

| | £ | s. | d. |
|---|---|---|---|
| Battery men | 0 | 0 | 7·02 |
| Blanket boys | 0 | 0 | 7·02 |
| Stamp feeders | 0 | 0 | 9·80 |
| Vanner boys | 0 | 0 | 4·68 |
| Sand burners (chlorinating) | 0 | 1 | 1·50 |
| Men at cyanide works | 0 | 1 | 3·40 |
| Total per ton | 0 | 4 | 9·42 |

*Cost of Materials per ton of Quartz crushed.*

| | £ | s. | d. |
|---|---|---|---|
| Fuse, candles, explosives, &c. | 0 | 4 | 5·00 |
| Firewood | 0 | 2 | 10·00 |
| Chemicals | 0 | 1 | 8·68 |
| Total per ton | 0 | 8 | 11·68 |

Digitized by Google

*Total Cost of Mining, Milling, and Chemical Treatment per ton crushed.*

| | £ | s. | d. |
|---|---|---|---|
| Labour at surface | 0 | 3 | 11·91 |
| Labour below ground | 0 | 9 | 0·63 |
| Milling and chemical treatment | 0 | 4 | 9·42 |
| *Materials*:—Fuse, candles, explosives, &c. | 0 | 4 | 5·00 |
| Firewood | 0 | 2 | 10·00 |
| Chemicals | 0 | 1 | 8·68 |
| Total per ton | 1 | 6 | 9·64 |

*Chlorination Process.*

*Cost of Chlorination per ton crushed.*

| | £ | s. | d. |
|---|---|---|---|
| Wages and chemicals | 0 | 1 | 6·18 |

*Cyanide Process.*

*Cost of Cyaniding per ton crushed.*

| | £ | s. | d. |
|---|---|---|---|
| Wages and chemicals | 0 | 2 | 7·40 |

*Cost of Chemicals per ton crushed.*

| | £ | s. | d. |
|---|---|---|---|
| Chloride of lime | 0 | 0 | 3·24 |
| Sulphuric acid | 0 | 0 | 1·44 |
| Cyanide of potassium | 0 | 1 | 4·00 |
| Total per ton | 0 | 1 | 8·68 |

*Cost of Treating Pyrites per ton of Concentrates.*

| | £ | s. | d. |
|---|---|---|---|
| Wages | 0 | 1¼ | 11·60 |
| Firewood | 0 | 8 | 0·00 |
| Chloride of lime | 0 | 3 | 9·80 |
| Sulphuric acid | 0 | 1 | 7·20 |
| Charcoal | 0 | 0 | 1·60 |
| Assaying and chemicals | 0 | 0 | 6·00 |
| Total per ton | 1 | 9 | 0·20 |

Gold recovered, 4,672 oz., costing 5*s.* 7½*d.* per oz.

Digitized by Google

## DISCUSSION.

**Mr. McDermott** said he would be glad to see other members send in similar communications, which should, if possible, show not only the cost of working but, in addition, a brief summary of the methods adopted, such as those relating to the cyanide and chlorination processes, upon which the paper before them brought out several points of interest. The precipitation of the cyanide solutions and the chlorine solutions by charcoal was exceedingly simple, and, if effective, had a great deal in its favour. He would like to hear what the Deeble system referred to was, as he did not remember the name. He presumed that the vats were treated directly after being filled, and not re-handled, as was sometimes done on the Rand, after settling in one set of tanks before leaching. With regard to the cost of working, he did not see any amount for general management expenses. He supposed that the "Manager Assayer" was simply the assayer.

**The President** stated that he was also mine manager.

**Mr. McDermott** thought that in that case his services were very cheap. With regard to the cost of materials, he took it that that covered all supplies used in the mill. He would be glad to know if the author could supply any further details in order that the cost could be compared with that at other mines. As the figures stood they could only compare the general total. With regard to concentration, he noticed that blanket strakes were used, and desired to know whether there were vanners in addition.

**Mr. Rickard** remarked that it appeared to him that the statement that the mine was being worked for £1 6*s*. 9*d*. per ton was, on the face of it, not strictly correct; in fact, it was clear that the cost was 42 per cent., seeing that 58 per cent. of the gold was distributed in dividends. The cost would therefore work out at about £2 13*s*. 0*d*. per ton, instead of £1 6*s*. 9*d*. At the beginning of the paper it was stated that the profit made during 15 years was about £150,000, or £10,000 per annum, whereas the 6,000 tons of quartz treated in one particular half-year would amount to something like £40,000 a year, or four times the yearly average. That tended to show that the figures given in the various tables simply represented the cost of harvesting the ore which had been expensively prepared by a period of development. It was rather a well-known habit of their Australian friends to give very brilliant statements of results, and point to the low price at which they worked. Nothing was said about the stages of poverty and per-

Digitized by Google

severance which had to be encountered before such results were achieved.

**Mr. Harman** asked whether the author was able to give the cost of the machinery in use on the mine, in order that they could arrive at some estimate of what the preliminary expenses had been.

**The President** explained that the Deeble process was brought out in Victoria three or four years ago, and had come into considerable use in the last two years. It was invented for the purpose of treating a large quantity of old pyrites concentrate refuse, which had already been treated by the chlorination process, and was found to contain between 1 and 3 dwt. of gold per ton. The process was a very simple one, and consisted of a series of vats with an arrangement by which the stirrers could be raised or lowered. The material was put into the vats and agitated with a very dilute solution of cyanide. It was then allowed to settle and the liquor run through charcoal precipitating vessels and the gold extracted in that way. A fresh wash of weak cyanide was then added, and, after being run off, the tailings were thrown away. With regard to Mr. McDermott's question about the vats at the South German Mine, they had hitherto been filled with the ordinary Butter's distributor, and the slimes run to waste; but a plant was being put up on the Deeble system for treating the slimes, and they hoped to be able to extract more gold.

He thought Mr. Rickard's remarks were to some extent justified, but considered that he went a little further than was necessary, as the figures given in the paper clearly indicated what they were for. They did not profess to include general charges nor the original developments of the mine; neither did they include the cost of machinery, &c. He would have been very glad to have been able to put the balance sheet for the period between 1882 and 1897 in the paper, because it showed the figures required, as it gave the cost of the machinery, the cost of the mine, and the cost of developments. As the balance sheet had not been put into the paper the cost of management had not been stated, but he had no doubt, if it were desired, the particulars could be forthcoming. In his opinion such figures would make the paper more complete, but the statement that the cost of working the mine amounted to £1 6*s.* 9·64*d.* was clearly set out in the paper as being the entire cost of breaking out the quartz, raising, milling, cyaniding, &c.; and the detailed costs were given :—



Digitized by Google

*July*, 1882 *to July* 20, 1897.

| *Receipts.* | *Expenditure.* |
|---|---|
| £302,295 5*s.* 8*d.* | £151,976 11*s.* 11*d.* |

Trust account and call, £10,033 0*s.* 7*d.*

The cost of working at the mine in question could be easily compared with the cost of working at other mines. In his experience the general charges of different mines varied greatly, and it was always better to keep them by themselves so that a comparison may be made apart from the other costs. What they wanted to do, as practical men, was to compare the cost of the actual labour operations which were affected by labour conditions—the goodness or badness of the labour, and the different rates of wages. In reply to Mr. Harman, the cost of machinery was not included in the figures given. He might add that it would have been a misleading statement had he said that the total cost of treating the ore amounted to £1 6*s.* 9*d.*, and therefore he had been careful to point out what that sum included.

---

## CONTRIBUTED REMARKS.

**Mr. W. Wybergh.** One of the most interesting things in Mr. Mactear's paper is the method described for precipitating gold from cyanide solutions by means of wood charcoal.

It would be interesting to learn whether separate precipitating tubs are used for the strong and the weak solutions. Also, what is the total amount of solution passed through each series of tubs per hour, and what is the height of each tub? What amount of gold is allowed to accumulate in the first tub before it is cleaned up, and how long does it take to accumulate?

What reaction takes place, what is the condition of the cyanide solution after the gold has been precipitated, and what is its assay value per ton?

It would be interesting also to know whether precipitation is complete from very dilute solutions, such as are now in use on the Rand for slimes treatment.

If the method is generally applicable, its great advantages are sufficiently apparent. It appears preferable to either the Siemens and Halske, or the zinc process, in convenience of manipulation, small initial cost of plant, direct production of high grade bullion, and finally in the absence of royalties.

Digitized by Google

The use of charcoal for precipitating gold from combination with chlorine is, of course, well known, but, so far as the writer knows, there is no recorded instance of the use of charcoal for precipitation from cyanide solutions.

In the absence of the author, Mr. Kitto then read the following paper :—

## "Mining in Perak."

By Frank Owen, M.Inst.M.M.

*Introduction.*—In view of the present great depression prevailing in the home tin mining industry—in which so many of our members are interested—chiefly owing to the great production in the far East, a description of some of the leading features of Perak, one of the principal sources of tin out-put, may not be inopportune.

Excellent papers on tin mining in the Malay Peninsula have already been written by the late Mr. H. M. Becher (*Trans.*, vol. i, Part I, 1892), and by the late Mr. E. R. Pike (*Trans. Mining Association and Inst. of Cornwall*, vol. iii, Parts I and II, 1892), both of whom enjoyed opportunities of observation on the subject. The writer, therefore, wishes it to be clearly understood that whenever he may have occasion to differ from the statements or deductions presented by either of these gentlemen, it is only after a very careful consideration of the question in point.

*Area and Population.*—The area of the state of Perak has been computed to be 10,000 sq. miles, or 6,400,000 acres. In 1891 the population was estimated to be 214,254 inhabitants, of whom 366 were Europeans, 96,719 Malays, and 94,315 Chinese. It is probable that since that date the number, of the latter at any rate, has considerably increased. The extent of the tin industry may be gauged by the fact that according to the above census, the Chinese immigrants, by far the great majority of whom would be actively engaged in mining, nearly equalled in number the original Malay settlers.

*Public Works.*—There are 80 miles of narrow gauge railway open, and about 10 additional miles are annually constructed out of surplus revenue. New country is thus continually being opened up. There are 991 miles of roadway, of which 325 are first class metalled cart roads. The cost of these public works, constructed almost entirely during the last 10 or 15 years, has been principally defrayed by the large revenues accruing to



Digitized by Google

the government from the export duty on tin. The richness and extent of its alluvial tin deposits have placed Perak in such a sound financial position that it can afford to lend money to other of the Federated Malay States, Pahang for instance, which are not in such good circumstances. One has only to compare the state of affairs, which for many years past has prevailed in the Dutch East Indies, with that in the Malay States, to see that they, and Perak especially, present a veritable triumph of British administration.

*Chinese Weights.*—The Chinese system of weights is universally used in the East with reference to tin. These weights are:—

| | |
|---|---|
| 10 tees | = 1 hun. |
| 10 huns | = 1 chee. |
| 10 chees | = 1 tahil. |
| 16 tahils | = 1 kati. |
| 100 katis | = 1 pikul. |
| 3 pikuls | = 1 bharra. |
| 40 pikuls | = 1 koyan. |

The kati and the pikul are the two units of weight in common use. The kati = 1·3 lb. avoirdupois, consequently the pikul = 133·3 lb. or 0·06 ton, and 16·8 pikuls = 1 ton (2,240 lb.).

*Export Duty.*—The export duty levied on metallic tin in Perak in 1895, was $12·50 per bharra of 3 pikuls. On August 1st, 1896, it was reduced to $12·00 per bharra, and on the 1st November of the same year it was further reduced to $11·00 per bharra. This has been done at the petition of the Chinese miners, who alleged that with the higher rates of duty they could not make their mines pay, but the Europeans in the East interested in tin production would prefer to see the duty increased rather than lowered, with a view to restricting out-put, in the hope of raising prices. For the purposes of collecting duty, black tin is calculated as containing 65 per cent. of the metal. As a matter of fact, it generally contains from 68 to 72 per cent. in Perak, but the difference between the actual produce and the government rate about equals the loss on smelting. During the year 1895 the sum of $1,669,706·87 was collected by the Perak government on the metallic tin and tin ore exported from the state. For the purpose of this paper, the average value of the Straits' dollar will be taken at 2*s.* 2½*d.*, or $9·05 = £1 stg., being the official rate for the first quarter of 1896. This make a total amount of £181,489 17*s.* 4*d.* Taking the same rate, $12·50 per bharra = £7 12*s.* per ton (2,240 lb.), and $11·00 per bharra = £6 13*s.* 9*d.* per ton. Con-

Digitized by Google

sequently the total reduction of duty during 1896 has been 18*s.* 3*d.* per ton, and the rate in force in December of that year was equivalent to 11·15 per cent. on metallic tin at £60 per ton.

*Tin Out-put of the World.* (*Table I*).—To show the proportion of the tin out-put of British Malaya to that of the rest of the world for 1895, the following table, principally compiled from the *Mineral Industry*, is appended:—

TABLE I.

| | Tons. | |
|---|---|---|
| Perak .. .. .. .. .. | 21,356 | |
| Selangor .. .. .. .. .. | 22,561 | |
| Pahang and the other protected States | 8,589 | |
| | | 52,506 |
| Dutch East Indies .. .. .. | | 11,404 |
| England .. .. .. .. .. | | 7,500 |
| Australasia .. .. .. .. | | 4,992 |
| Bolivia .. .. .. .. .. | | 4,097 |
| | | 80,499 |

It will thus be seen that the Straits produce nearly two-thirds of the tin of the world, and of the latter it is noteworthy that over three-fourths (viz., 64,998 tons) come from the British Empire.

TABLE II.—OUTPUT OF PERAK.

This table shows the output of the various districts of Perak and its value for 1895. The metallic tin exported represents that smelted locally by the Chinese, and the black tin that sent to the European smelting works in Singapore.

| District. | Metallic tin exported. | Black tin exported (65 per cent.). | Total output of metallic tin. | Approximate total value of output. |
|---|---|---|---|---|
| | tons. | tons. | tons. | £ *s.* *d.* |
| Kinta .. .. | 12,178·02 | 6,820·27 | 16,611·19 | 1,051,986 13 3 |
| Larut .. .. | 4,160·76 | — | 4,160·76 | 263,500 18 7 |
| Batang Padang .. | 135·71 | 346·77 | 361·11 | 22,869 1 11 |
| Kuala Kangsar .. | 196·51 | 5·34 | 199·98 | 12,664 14 8 |
| Selama .. .. | 15·16 | — | 15·16 | 960 1 8 |
| Lower Perak .. | 3·65 | — | 3·65 | 231 3 1 |
| Matang .. .. | 2·61 | — | 2·61 | 165 5 10 |
| Upper Perak | 1·67 | — | 1·67 | 105 15 3 |
| Total .. .. | 16,694·09 | 7,172·38 | 21,356·13 | 1,352,483 14 3 |

For the sake of comparison the figures for 1895 of the neighbouring state of Selangor are given. For the first time these

Digitized by Google

## TABLE III.—FLUCTUATIONS IN PRICE.

This table shows the effect of the fluctuations in the price of silver on that of tin, and consequently on the value of the output of that metal from the Perak mines during the five years 1891—1895.

| Year. | London average price standard silver per oz. | Average rate of exchange Straits dollar. | Singapore average price Straits tin per pikul. | London average price Straits tin per ton. | Output of metallic tin. | Approximate value in London. | Increase or decrease. | |
|---|---|---|---|---|---|---|---|---|
| | | | | | | | Weight. | Value. |
| | Pence. | Pence. | $ c. | £ s. d. | tons. | £ s. d. | tons. | £ s. d. |
| 1891 | 45·06 | 38·37 | 32 57 | 91 4 0 | 14,066·60 | 1,268,807 6 5 | | |
| 1892 | 39·81 | 33·95 | 37 39 | 93 9 6 | 16,148·65 | 1,509,414 6 4 | +2082·05 | +240,606 19 11 |
| 1893 | 35·32 | 30·02 | 37 86 | 85 7 7 | 18,376·92 | 1,569,121 8 7 | +2228·27 | + 59,707 2 3 |
| 1894 | 29·13 | 25·09 | 38 03 | 68 18 1 | 21,657·30 | 1,492,187 19 5 | +3280·38 | − 76,933 9 2 |
| 1895 | 29·53 | 25·08 | 35 05 | 63 6 8 | 21,356·13 | 1,352,483 14 3 | − 301·17 | −139,704 5 2 |
| Totals and averages | 35·83 | 30·50 | 36 18 | 80 9 2 | 91,605·60 | 7,192,014 15 0 | | |

Digitized by Google

overtop Perak. They are:—Metallic tin exported, 18,021·42 tons; black tin exported, 6,983·81 tons; total metallic tin produced, 22,560·89 tons, valued at about £1,428,781 3*s.* 3*d.*

*Present Production.*—The returns for the first quarter of 1896 showed a small increase as against the corresponding quarter of 1895, especially for Kinta, thus:—

For the Kinta district alone an increase of 293·90 tons.

For the whole of Perak, 295·03 tons. According to later advices from the Straits, it would appear that this increase has not been maintained throughout the year 1896, and that the continuation of the low price of tin is effecting a gradual but steady decrease in production. From a high official source, the total output of British Malaya for 1896 is put down as 1,500 tons less than in 1895, 1,000 tons of this decrease being due to the falling off in Kinta alone. On the same authority it is estimated that 1897 will show a further decrease of about 3,500 tons.*

*Kinta.*—It will be seen by a glance at the tables previously given, that the Kinta district is by far the largest tin producer in Perak, its output being more than three-fourths that of the whole state, viz., 16,611·19 tons out of a total of 21,356·13 tons. This district extends from the watershed of the Kinta river right across the valley of the same. Length about 40 miles, width about 25 miles, area 1,000 sq. miles, or 640,000 acres, being one-tenth that of the whole state. Its population in 1891 was estimated at 58,587. According to the returns of the inspectors of mines in 1895 41,000 Chinese were engaged in alluvial tin mining, of whom 2,770 were employed underground. It has been officially calculated that 30,000 acres of tin bearing ground have already been worked out in Kinta with a further 10,000 acres in course of exhaustion. Even if, as seems most probable, this represents some of the richest ground, it is obvious that the alluvial tin deposits of this district are as yet very far indeed from exhaustion.

The Larut district and the neighbourhood of Taiping, the

* *Straits Tin.*—The following is taken from a report by Sir C. B. H. Mitchell, K.C.M.G., Governor of Straits Settlements, dated July 5, 1897:—

"A climax has been reached in the tin mining industry, and it is doubtful whether, for some years at least, such large supplies will be recorded. Yet the Peninsula is known to abound in mineral wealth, and it is difficult to say what would be the effect of a stimulant in the shape of high prices and increased demands. A small increase is seen in the quantity sent to all places, the total production for the year touching 53,114 tons, an advance of about 400 tons. There was a large falling off in exports to the United Kingdom, but an increase in the quantity sent to the United States of America."

Digitized by Google

capital of the state, were at one time the principal seats of tin mining, but during the last ten years or so Kinta has more and more come into prominence, and is now indisputably the centre of the industry.

*Nature of Country* —The main feature of the country rock of Kinta is granite, which in many cases forms the bed rock of the tin alluvium. It is not infrequently altered into kaolin, and in this form often has the tin washdirt disseminated through it. In most places a limestone formation overlies the granite. The limestone is also to be seen cropping out at surface in huge masses, forming hills 800 ft. and more in height, which, covered with trees and dense vegetation, form a very striking feature in the surrounding landscape. No fossils of any kind have been found in this limestone, but the exact relation of the different rocks to each other does not seem to have been much studied, and the geology of Perak is still imperfectly understood. In the state of Selangor, near the capital, Kuala Lumpur, large masses of white quartz, easily mistaken at a distance for limestone, are to be seen cropping out, very much as does the limestone in Perak. In Selangor the formation is chiefly granite with, in places, a kind of iron-stained clay overlying it.

*Mode of Occurrence of Tin Alluvial.*—The tin bearing deposits found in Kinta, which are more or less typical of the whole state, are of three distinct forms, viz. :—

(1) *Surface Alluvial.*—Top soil carrying payable tin right down from the grass roots. This class of deposit seldom much exceeds 15 ft. in depth, and may be termed "surface alluvial." It is exploited by a system known as "lampan," or surface, working. Several small channels are cut in a hillside, down which the washdirt is allowed to run into a main channel, where it is collected, and the tin washed up in an inclined sluice box of a type which will be described later. Where water can be brought round easily continuous working is carried on; otherwise it is necessary to wait for rain, which is stored in pits at the top of the workings. This is the method practised, mostly on a small scale, by the Malays, who never engage in anything like deep alluvial mining.

(2) *Shallow Alluvial.*—Stanniferous washdirt, usually 10 to 20 ft. deep, lying under 15 to 20 ft. of overburden. This is the most usual form of deposit met with in Perak, especially in Kinta, and will be referred to as "shallow alluvial." It will sometimes happen that there are two layers of washdirt, known respectively as "karang gantong" (hanging washdirt) and

Digitized by Google

"karang betul" (true washdirt), with 10 to 20 ft. of barren soil or gravel intervening, before the "kong" or bed rock is reached. It is hardly correct, as has been stated by some, to say that this upper layer is generally unprofitable. In Perak, at least, it often happens that it is quite as payable as the lower layer, and occasionally, even more so; indeed, there appears to be no general rule on the subject. This class of deposit is naturally more expensive to work than the "shallow alluvial" previously described, as the overburden has to be stripped before the payable part can be attacked.

(3) *Deep Leads.*—"Deep leads" with 30 to 50 ft. of overburden and occasionally even more. Here, either open cast workings on a considerably larger scale must be carried out, or shafts sunk, and the deposit worked on a regular system of underground mining. However correct it may have been a few years ago to state that this form of deposit was but little know in the Straits, it can scarcely be said to apply at the present time in view of later developments. Indeed, to-day many of the largest Chinese workings in Perak and Selangor are on "deep leads," and some have been carried as deep as 400 ft.

*Method of Working Surface Alluvial.*—A good example of working this form of deposit is to be found on the property of the Leh Chin Mining Company, Limited, of Dublin, at Changkat Pari, Ipoh. This company has paid dividends varying from 5 to 15 per cent. uninterruptedly since its formation in 1891, and is still working at a profit. The mine is 277 acres in extent, and the system pursued by the company is leasing for short terms to Chinese. As fast as the ground in one place shows signs of exhaustion the coolies move a little further on. The outfit required for a gang of coolies consists simply of hoes, rakes, baskets, and a sluice box. About 600 coolies are employed here altogether. The "changkols," or hoes, are of two kinds: long and short-handled. The latter have handles 5 ft. long and are for breaking down the washdirt *in situ*. The handles of the former are 9 ft. in length, and these hoes are for keeping the tin alluvial in motion whilst in the sluice box. The blade of the hoe is of wrought iron, and is made locally, costing about 50 c. (1*s.* 1¾*d.*). It is inclined inwards, *i.e.*, towards the holder at an angle of about 60°. For breaking ground its dimensions are: length, 1 ft.; width, 6 in.; and for the sluice box it is 1 ft. 3 in. long and 9 in. wide. The "ki-tsai," or wicker baskets for carrying the washdirt from the open works to the sluice box, are flat and of varying sizes, but 1 ft. 6 in. long and 1 ft. 3 in. extreme width in the middle are

Digitized by Google

sizes commonly seen. They are carried across the shoulders on a yoke pole known as the "kandur" stick, about 4 ft. long, the coolie balancing himself whilst carrying a heavy load on each side in an extraordinary manner. At first sight it would appear that this primitive method of transport would be both wasteful and inefficient. Experience in the Straits has, however, shown that European methods, whether by tramroads or otherwise, cannot compete with the coolies and their baskets for economy in working alluvial. From actual personal observation, it has been noted that a coolie will carry a load of 80 katis (104 lb.) a distance of 50 ft. to the sluice box, returning the same distance to the working face, in one minute. Coolies carrying baskets work 6 hours a day, in spells of 3 hours at a time. Deducting one-eighth, probably a good deal in excess of the actual period lost, —at any rate with coolies working on contract,—a coolie will carry 15 tons per day this distance. At the average rate of wages of 40 c. (10½*d.*) per day, this works out at 0·025 c. (¼*d.*) per ton.

*Sluice Box.*—For surface working a small sluice box ("lanchut ketchil") is used for washing the tin dirt, in contradistinction to the large sluice box ("lanchut besar"), employed in the case of deeper workings. The box is shaped something like a coffin, widening out in the centre, and narrowing again towards the bottom. It is inclined from the top downwards about 1 in 10, and has these dimensions, viz.:—

Length, 9 ft.
Width at top, 1 ft.
,, bottom, 1 ft. 3 in.
Extreme width, 2 ft. 6 in.

Water and washdirt are let into the box together through a hole 6 in. wide at the side of the box, and 1 ft. from the top of it. At the widest part of the box, which is situated 3 ft. from the top, there is a ridge 3 or 4 in. high, over which the coolie, who is manipulating the tin ore, allows the mixed water and ore to escape in a small stream. The amount of each he regulates with a long-handled hoe and with his foot, in a very expert manner. The art of doing this is only learnt after considerable practice, and being besides very hard work—for he must not stop for much rest whilst ore is in the box—the coolie doing this part will, by mutual consent, get rather more pay, say a few cents per pikul, than the rest of the gang. If the washdirt contain much clay, it has to be puddled in a shallow, rectangular pit at one side of the

Digitized by Google

sluice box, before being washed in it. The puddling is done with short-handled hoes. The tin ore is concentrated simply by being pushed up and down the bottom, 6 ft. of the sluice box with the long hoe, the action of the water leaving the clean tin at the top. As the coolies work three hours at a time, the box is cleaned up before changing shifts, except in the case of exceptionally rich ore, when it may be cleaned up twice in a shift. One coolie is employed in picking out the stones from the washdirt by hand, and with a rake. The latter, being of the ordinary kind, needs no description. Another coolie stands at the bottom of the sluice box with a short hoe, keeping the tail-race clear of the "amang," or gangue, washed down, and seeing that no tin escapes with it. Thus, if puddling be necessary, four men are required to work a small sluice box, but if not, then three men only. With a sluice box as described, 50 cub. yd. (or say, roughly, 100 tons) of tin alluvial can be washed in six hours, if the ground be fairly loose. The loss of tin is not nearly so great as might be imagined, and, except with very rich ore, or careless washing, may be put down as not exceeding 3 per cent. An assay of a fairly rich sample of tailings from the Changkat Pari Mine, kindly made by Mr. Benedict Kitto, showed 1·7 per cent. of metallic tin, but, with the present system of working, the bulk of tailings would not run so high. The tin may be said to be saved rather by the expertness of the washer than by any particularly advantageous feature which this form of sluice box possesses. It is not often that it pays to rewash tailings. The Straits Trading Company, Limited, sell the tailings from the sluice boxes at their Ipoh works at 40 c. per pikul (= 14*s.* 10*d.* per ton), but in this case they are from the reconcentration of badly washed ore, and not from direct treatment of washdirt.

*Working of Shallow Alluvials and Deep Leads.*—The working of shallow alluvials and of deep leads may be considered conjointly, for the open cast system pursued is in each case the same. The overburden is stripped by a class of men known as "nai-chiang" coolies, so called because they are paid for this work at a fixed rate per "chiang." The latter has been fixed by the Chinese Protectorate at 30 ft. long × 30 ft. wide × 1½ ft. deep = 50 cub. yd. The average price in Kinta is $4·00 to $7·00 (8*s.* 10*d.* to 15*s.* 5½*d.*) per "chiang," according to the distance the overburden has to be removed behind the working face. This is equivalent to 8 c. to 14 c. (2*d.* to 3¾*d.*) per cub. yd. The men working underground, or in the open mine, breaking down washdirt, or washing the same, may be of two classes. Either "kung-si-kung" (so

Digitized by Google

called from the word "kung," meaning a day's work), working on day's pay at fixed wages: in fact what are called in Cornwall "owner's account" men. In this case the "thauke" or advancer (who may or may not be the actual owner of the mine), guarantees their pay, whether the mine prove profitable or not; or "co-operative coolies," working in "kongsis," or gangs, in number from 20 men upwards. The remuneration of these latter depends upon the amount of clean tin ore produced, being in short, a modified form of tribute, but with the advancer, who, if not the actual owner of the mine, has his own separate arrangement with the latter.

The "karang," or tin-bearing washdirt is chiefly crystalline quartz, with some felspar, whilst the "kong," or bed-rock, is either granite or limestone.

*Pumping.*—Where water is encountered in any considerable quantity, it is raised by a "kin-cher," substantially the same as the old Californian wooden pump described and illustrated in Warnford Lock's *Practical Gold Mining*, p. 188. It is of similar construction to the pumps used in China and Japan for irrigating the padi fields, and consists of an endless chain of wooden slats, revolving round similar slats fixed on a wooden rod, and actuated by small wheels at the top and bottom of the same. The length of rod and chain varies, of course, with the depth from which water has to be raised.

At Saiak Tin Mine, near Batu Gajah, Kinta, there is a pump raising 75 ft. in one lift, and this may be taken as about the maximum capacity. The angle of inclination is usually about 30°. The wheels have eight spokes, each 1 ft. long × 2 in. wide × 2 in. thick. The slats are 9 × 3 × $1\frac{1}{4}$ in. The motive power of the pump is supplied at shallow depths by coolies working a treadle at the top. The barrel of the treadle is 6 in. diameter, and the spokes of the same on which the coolies tread are 9 in. long and 6 in. diameter. With greater depths, where water power is available, small overshot wheels are used, 4 ft. 6 in. diameter, and 3 ft. breast, as much as one-eighth of the whole wheel being continually under water.

*Steam Engines.*—Where water is not to be had for power, the pump is geared on to a steam engine with pulleys. As Mr. Becher observed (*op. cit.*), this is still practically the only European improvement which the Chinese have adopted in their system of mining. Gwynne's "Invincible" and Robey's "Undertype" are the favourite engines in Perak. The prime cost of a 16-H.P. engine and boiler landed in Perak is about £800. The

Digitized by Google

engines in use at the alluvial mines are chiefly owned by European firms, who let them out to the Chinese and keep them in working order for $45·00 (£4 19*s.* 4*d.*) per month. It is but seldom that a Chinese advancer, however well his mine may be doing, will go to the outlay required to buy an engine outright. The Perak Government intend shortly to institute a regular system of boiler inspection. The engines are dragged on to the mines by coolies in gangs of 150 to 200 at a time. These can pull a load of 12 tons 3 miles an hour, along a fairly level road, if they have plenty of crackers to fire off, and frighten away the devils, whenever the engine gets stuck in a rut. If one or two coolies happen to get killed by the engine running away with them, going down a steep hill, the rest seem to regard the incident as a rather agreeable break in the monotony of the journey. For pulling engines coolies get 60 c. (1*s.* 4*d.*) per day, and extra rations of meat and sugar. A Chinese engine driver, who has probably been trained in some European settlement, gets $20·00 to $25·00 (£2 4*s.* 2*d.* to £2 15*s.* 2*d.*) per month. Total monthly cost of engine (exclusive of hire), averages $250·00, or £27 12*s* 4*d.*, per month. Firewood is contracted for either by the cord or by the 1,000 pieces. Representative prices in Kinta are:—Per cord of 15 × 5 × 2 ft., $1·70, or 3*s.* 9*d.*; per 1,000 pieces 3 ft. long and 6 in. thick, $2·00 to $2·50 (4*s.* 5*d.* to 4*s.* 10¼*d.*).

The wooden pumps are now to a considerable extent being replaced by centrifugal pumps. Where only small quantities of water have to be dealt with they are raised from sumps down to 40 ft. in depth, in wooden buckets 1 ft. 3 in. diameter and 1 ft. deep, holding 3 to 4 gallons. The bucket is attached to a light wooden rod, which is fastened to another, having a counterbalance at its far end. This latter works in a pivot, which is fixed in a pole, placed vertically in the ground. The bucket is lowered into the water by means of the counterbalance, and when full rapidly lifts itself.

*Chinese System of Mining.*—Where the overburden is considered too deep to be removed by an open cast working, shafts are sunk, and the washdirt removed from them. If the ground will stand, in stiff clay for example, they are made circular, and are 3 ft. diameter. In running ground they are 3 ft. square, and are timbered with 1 in. laths. One mine will have 12 or more of such shafts, laid out in straight lines, and at right angles to one another. They are 18 to 20 ft. apart. The shafts communicate with one another underground by a series of drives. Average size of drive at commencement of extraction of washdirt 4 × 3 ft. These

Digitized by Google

will be continued in width and depth until the deposit of washdirt is worked out. The roof of the drive is supported at intervals of 3 to 4 ft. by single props, 4 to 6 in. diameter. These have semi-oval slabs at top and bottom, the flat side in each case being nearest to the ground.

If there be only a little water in the workings it is bailed out with the ubiquitous kerosene tin. Otherwise the workings are so arranged as to drain into one central sump, from which the water is pumped up through iron pipes, 4 or 5 in. diameter. A centrifugal pump is then placed in the sump, and is worked by steam. The washdirt, if stiff clay, is raised in the wicker baskets already described. When too soft for these, kerosene tins are used. The ordinary load is 1 pikul at a time. A rough windlass is used for hoisting, such as is commonly seen with prospecting shafts. The barrel is 6 in. diameter, and is bound with hoop iron at both ends. According to the depth of the workings the windlass is either single or double handled. The handles are simply pieces of bent stick dovetailed into the windlass barrel.

Mineowners are now obliged by Government to fill in or fence round abandoned shafts.

*Tin Dressing.*—With workings on a large scale, the "lanchut besar," or large sluice box, is used. It is of the same shape as the small box already described, and has these dimensions, viz.:—

Length, 25 ft.
Width at top, 1 ft. 6 in.
,, bottom, 2 ft.
Extreme width (situated 5 ft. from top of box), 4 ft.
Inclination about 1 in 10.

The water and washdirt are let into the box through a hole at one side, 2 ft. from the top. Three men are employed keeping the washdirt in motion with long-handled hoes, one with a rake picking out stones, two puddling, if required, and one keeping the tail race clear. Total, five or seven men to the box, according to whether the alluvial contains much clay or not. According to the amount of clay present the length of the box will be increased, so as to give the hard lumps a greater chance of being broken up. With very troublesome ore, as at the Rotan Dohan Mine, near Batu Gajah, the tailings are sometimes collected in a pit at the bottom of the sluice box. They are puddled over again and re-washed. The black tin collected at the clean-up of the sluice box is jigged by hand in sieves 1 ft. diameter, 3 in. deep, and 40 mesh. With regard to Mr. Garland's remark in his presidential address

Digitized by Google

(*Trans.*, vol. iv, p. 200), as to the utility of hand jigging with a sieve for testing ores, the writer is acquainted with only *one* European in Perak who can do it thoroughly, *i.e.*, as well as a Chinaman. Before the black tin is sold, it is all rewashed in a small sluice box, and rejigged by hand. If carefully done, with fairly good ore, a concentrate containing from 68 to 72 per cent. metallic tin will be the result. The clean tin is taken every evening in wooden buckets holding 1 pikul each into the "kongsi" house, where it is stored in bins, or in a wooden receptacle in the floor. With European management the tin is taken into a "godown" or store, where it is packed wet into jute bags holding 80 katis (104 lb.) each, and guarded day and night by Sikh watchmen.

*Tin Buying.*—Most Europeans connected with tin mining in Perak sell their tin to the Straits Trading Company, Limited, who are the only European buyers and smelters in the East, and have agencies at the various mining centres throughout the native states. This Company, having large funds at its disposal, can afford to make advances to responsible parties against their tin, and to buy the same in any quantity for cash at close market rates. They send the tin to their smelting works at Pulau Brani Island, Singapore. An interesting account of these works has been written by Messrs. McKillop and Ellis (*Proc. Inst. C.E.*, vol. cxxv, 1896). They are by far the largest of their kind in the world, the monthly output of refined tin for 1896 averaging 2,300 tons. Some years ago an attempt was made to start smelting works on the European system at the port of Teluk Anson in Perak, but the project had to be abandoned owing to the cost of transporting fuel. At Singapore Japanese coal can now be landed at \$3·00 to \$4·00 (6*s.* 8½*d.* to 8*s.* 10*d.*) per ton.

Many Chinese miners are also interested in smelting works, to which they send their own tin. In the statistics of the tin output of Perak, previously given, the black tin exported from the state practically represented that purchased by the European smelters, and the metallic tin that smelted by the Chinese. It will be seen that the latter handle over three-fourths of the whole production.

*Chinese Assay.*—In Kinta, where the average metallic produce does not exceed 70 per cent., the black tin is bought on a washing assay. This is carried out by jigging the sample very carefully by rotation in a series of four sieves, respectively 40, 60, 80, and 100 mesh, beginning with the coarsest and ending with the finest sieve. These sieves are 3 in. diameter and 1½ in. deep. The

Digitized by Google

sample is taken by thrusting a steel gouge, 1 ft. 6 in. long, after the pattern of the grocer's cheese taster, well into the centre of each bag. The various samples are then thoroughly mixed, and the final sample for washing obtained in the usual way. The sample is weighed wet, dried, and reweighed to ascertain the amount of moisture, if the bags coming from the mine are damp. It often happens that the ore contains from 3 to 12 per cent. moisture. The sample before washing is thoroughly moistened and weighed *wet*, the usual weight taken being 3 tahils (3 oz. 14¼ drams avoirdupois) of wet ore. The balance used is called a "datching," and consists of a bone or ivory beam 14 in. long, with a brass counterpoise attached working on the fulcrum and lever principle. The beam is graduated in tahils, chees, and huns, carries a weight in the pan of 3 tahils, and is sensitive to 1 hun (0·56 grain troy). The cost of such a balance is $1·00. It has been suggested that one of these balances, graduated, of course, in English weights, would be useful for gold prospecting. After washing, which will take about a quarter of an hour, the sample is reweighed wet and the percentage of clean black tin calculated. With Chinese buyers the actual metallic contents of the concentrated oxide are a matter of estimation. As the produce of any one mine, as a rule, varies but very little, it is seldom that they are much out in their calculations.

Some Chinese miners do not concentrate their ore higher than 55 to 60 per cent., but the "amang" or gangue rejected should not, if the alluvial has been properly washed, exceed 5 per cent. This consists principally of magnetic and titaniferous iron ore (ilmenite or manaccanite) and black schorl (tourmaline). Wolfram is rare in Perak tin, except that from the Batang Padang district; the Kinta tin contains very little. Unless the washing assay be very carefully conducted, the loss of tin (often intentional on the part of a Chinese buyer's washer) will be about 3 per cent.; but with an expert washer it *can*, though it very seldom is, be made practically negligible. A Cornishman of considerable experience told the writer that he could generally get fine tin on the vanning shovel out of the gangue rejected by Chinese washers. Should a Chinaman be offering a higher price for tin than the European buyers are giving, it is found not amiss to test the scales on which the ore bags are weighed.

*Straits Trading Company.*—When the ore received by the European buyers is dirty, it is re-washed in a sluice box before it is sent to the smelting works. Dimensions of sluice box at Straits Trading Company's works at Batu Gajah:—

Digitized by Google

Length, 15 ft.
Width at top and bottom, 1 ft.
Widest part (3 ft. from the top), 2 ft. 6 in.

Two men are required for each sluice box. Some of the ore at this place is brought in very dirty, but the Company do not care to handle ore unless it can be re-washed so as to run at least 63 per cent. metallic tin. In Selangor, where the average produce is higher than in Perak (running as high, in some instances, as 76 per cent. metallic, whilst 73 and 74 per cent. are not uncommon), the Company discourages all but large sellers to bring anything but very clean ore, which certainly seems to be the preferable way. At the Kuala Lumpur and Sungei Besi agencies in this state the cyanide assay for tin is practised in preference to hand jigging. The cyanide method is also used at the smelting works at Singapore, so that one acts as a check on the other. This assay has been fully described by Messrs. Rennie and Derrick (*Journ. Soc. Chem. Ind.*, vol xi, August 31, 1892).

It is interesting to note that in the Selangor agencies Tamil (Madras Indian) has been substituted for unskilled Chinese labour as used in Perak. According to the manager, there is a monthly saving of $4·00 (8*s.* 10*d.*) per head in wages, and increased efficiency.

*Method of Tributing.*—The following detailed account, kindly furnished by the writer's friend, Mr. F. J. B. Dykes, manager of the Leh Chin Mining Company, Limited, shows the system of "chabut" or tribute in vogue with co-operative coolies in Perak. The figures as to smelting charges, &c., though not absolutely accurate, perhaps, are a very fair approximation to the truth. It is stated that the smelting charges of $2·00 per pikul (= £3 14*s.* 3*d.* per ton) very nearly represent cost price, and that the smelters depend in the main for their profit on the commission of 50 c. per pikul (= 18*s.* 6¾*d.* per ton), and on the large quantity of tin ore passing through their hands, on which this charge is levied.

THE LEH CHIN MINING COMPANY, LIMITED.

*Kongsi No.* 11. *Account Sale Parcel of Tin Ore.*

| | | | |
|---|---|---|---|
| Gross weight 102 bags .. .. .. | pikuls | | 84·00 |
| *Deduct* 5 per cent. for moisture .. | „ | 4·2 | |
| 1 kati per bag for weight of bag .. | „ | 1·2 | |
| | | — | 5·04 |
| Net weight of parcel .. .. .. | pikuls | | 78·96 |



Digitized by Google

Sample on washing yields 97 per cent. black tin.

Assay value of black tin, 72 per cent. metallic.

$\frac{97 \times 72}{100} = 69{\cdot}84$ per cent. metallic tin in parcel.

Singapore price of metal, 6th July, 1896, $32·27 per pikul.

| | $ c. | $ c. |
|---|---|---|
| 69·84 × 32·27 = gross value per pikul .. .. | | 22 53 |
| *Deduct* charges, viz.:— | | |
| Export duty at $4·00 per pikul, calculated on 65 per cent. metallic .. .. .. .. | 2 60 | |
| Cartage to "godown" .. .. .. .. | 0 05 | |
| S. T. Co.'s commission and agency at Ipoh and Singapore .. .. .. .. .. .. | 0 50 | |
| Railway freight to Teluk Anson .. .. .. | 0 15 | |
| Steamer „ to Singapore .. .. .. | 0 20 | |
| Smelting charges .. .. .. .. .. | 2 00 | |
| | | 5 50 |
| Net value per pikul .. .. .. .. .. | | 17 03 |
| Gross value of parcel:— | | |
| Pikuls, 78·96 at $17·03 .. .. .. .. | | 1344 68 |
| *Deduct* Leh Chin Co.'s royalty, 50 c. per pikul on gross weight .. .. .. .. .. .. | | 42 00 |
| | | 1302 68 |
| *Less* Leh Chin Co.'s royalty, 15 per cent. on $1302·68 | | 195 40 |
| Nett value of parcel to advancer and coolies .. .. | | 1107 28 |
| Advancer's commission, 50 c. per pikul .. .. | 42 00 | |
| Coolies' headman commission, 50 c. per pikul .. | 42 00 | |
| | | 84 00 |
| Balance due to gang of coolies .. .. .. .. | | 1023 28 |
| *Summary*:— | | |
| The mine owners receive .. .. .. .. | 237 40 | |
| The advancer .. .. .. .. .. .. | 42 00 | |
| The headman* .. .. .. .. .. .. | 42 00 | |
| The coolies .. .. .. .. .. .. | 1023 28 | |
| | | 1344 68 |

The total charges for realisation of the tin amount to $92·40 (£10 4*s.* 2*d.*) per ton. At the Kuala Lumpur agency in Selangor the charges are $4·80 per pikul (= $80·64, or £8 18*s.* 2*d.*, per ton). The tin has not to be carried so far to the river port, so that the railway freight is a little lower, and being nearer to Singapore the steamer freight there is also cheaper. The cost of smelting, again, is not quite so high as with Perak tin, because the oxide is a little purer.

*Co-operative System.*—The parcel of tin, of which the sale

* The headman receives this sum of $42·00 in addition to his equal share as a member of the gang.

Digitized by Google

account has just been given, represents the output of one gang of 20 men for three months.

A coolie's gross earnings therefore amount to—

| | $ | c. | £ | s. | d. |
|---|---|---|---|---|---|
| For three months .. .. .. | 51 | 16 | or 5 | 13 | 0 |
| Per month (25 working days) .. | 17 | 05 | ,, 1 | 11 | 7 |
| Per day .. .. .. .. | 0 | 68 | ,, 0 | 1 | 6 |

From his daily wage must be deducted, food 20 c., opium 10 c., total 30 c., or 8*d.* Thus, if an opium smoker, his net earnings are 38 c., or 10*d.*, and if not they are 48 c., or 1*s.* 0¼*d.* per day. It may here be remarked, on excellent authority, the opinion expressed by the late Royal Commission on opium notwithstanding, both advancer and headman endeavour to get as few opium smokers as possible in the gang. They state that opium-smoking coolies are found to be lazy and unmanageable.

The coolies above mentioned, having had a rich patch of land to work, did exceptionally well during the three months. 50 c., or 1*s.* 1¼*d.*, gross = 20 c., or 5¼*d* net, represents an average daily wage in Perak.

*Truck System.*—The "Kongsi" No. 11, which is one of the 30 working on the Leh Chin Company's land, may be taken as a fair example of a gang of coolies working on the co-operative system. There are 20 men in a gang, working on a three months' agreement (sometimes the agreement will be for six months). The advancer works in conjunction with the Company. He gets 50 c. per pikul commission on all tin sold, but his real profit lies in supplying the coolies with money advances, food, opium, and clothes. Thus, at one of the largest mines near Taiping the Chinese mine owner, who in this case was his own advancer, was actually losing on the working of the mine, but recouped himself on the profit which he made out of his coolies.

The Company has only to find the "Kongsi" house, or quarters for the gang of labourers, cost of which will not exceed $250·00 (£27 12*s.* 4*d.*), and, in some instances, defray half the cost of construction of watercourses.

The advancer finds the following outfit on a new gang starting work:—



Digitized by Google

| | $ | c. |
|---|---|---|
| 4 hoes at 47½ c. .. .. .. .. .. | 1 | 90 |
| 1 long-handled hoe.. .. .. .. .. | 0 | 65 |
| 8 wicker baskets at 20 c. .. .. .. .. | 1 | 60 |
| 1 rake .. .. .. .. .. | 0 | 40 |
| 1 small sluice box .. .. .. .. .. | 4 | 00 |
| 3 wooden tubs (for tin) at 25 c. .. .. .. | 0 | 75 |
| 2 iron pots (for rice) at $1·80 .. .. .. | 3 | 60 |
| 1 knife .. .. .. .. .. .. | 0 | 40 |
| (£1 9*s.* 4*d.*) | 13 | 30 |

*Mining Advancer.*—It will thus be seen that in the first instance the "thauke," or advancer, need not necessarily be a man of means. The monetary advance required to be made daily per man is, to an opium smoker 30 c., to a non-smoker, being for food only, 20 c. Food consists chiefly of rice, dried fish, pork, vegetables, sugar, and oil. On the sale of these the advancer makes a profit of 15 to 25 per cent. In cases, as the one quoted, where the gang are doing well, he will try to advance them either in cash or kind up to the full proportion of the tin sales due to them, so that when the settling day arrives the coolies have no cash to receive, and are often even in debt. In this the advancer is much assisted by the inveterate gambling habits of his fellow-countrymen. The rate of interest customary on cash loans is 5 per cent. per month, so that for a six months' loan the coolie pays 30 per cent., being at the rate of 60 per cent. per annum. Some advancers charge a uniform rate of 20 per cent. interest for any period during the six months, thus actually lending the coolie 80 c. whilst debiting him with $1·00.

The coolies are obliged to buy all supplies off the advancer at his own price.

*Fines.*—The latter has the customary right, now recognised in British courts of law, to inflict these fines, viz.:—

(1) For selling tin ore to outside buyers, $100·00, one-half of the fine being chargeable to the headman and the other to the whole gang.

(2) For clandestine purchases of supplies or opium: if by a coolie, 1·00; if by the headman, $25.

(3) For fighting in the "kongsi" house, or on the mine, in an affray which does not attract the attention of the police: the assaulter $5·00; the party assaulted, if he strikes back, $3·00.

(4) For a general disturbance, the whole gang is fined $25·00

Digitized by Google

in the case of co-operative coolies, and $100·00 with contract strippers (of overburden).

(5) If a coolie stop working before the fixed time without reasonable cause, $5·00; if the whole gang stop, $50·00.

(6) For gambling in the "kongsi" house, $25·00 for the whole gang.*

(7) A coolie, for disobeying a reasonable order of the headman, $1·50.

*Working Hours.*—Where water is scarce, co-operative coolies work six hours a day, in shifts of three hours at a time, so that the different shifts do not interfere with each other, as regards water.

The working hours are:—

| | | | | |
|---|---|---|---|---|
| 1st shift | 5.30 A.M. | to | 8.30 | A.M. |
| 2nd „ | 8.30 „ | to | 11.30 | „ |
| 1st „ | 11.30 „ | to | 2.30 | P.M. |
| 2nd „ | 2.30 P.M. | to | 5.30 | „ |

"Nai-chiang," or contract strippers, and "kung-si-kung," or day's pay men, work seven hours a day, thus:—

5.30 to 9 A.M. = 3 hrs. 30 min.
12.30 to 4 P.M. = 3 „ 30 „

It is rare for the Chinese to work by night, except in the case of emergency. Each coolie has his own tally, which he takes every day out of a box in the "kongsi" house, kept for that purpose. He gives it up to the timekeeper on completion of a day's work, so that the same may be credited to him. A working board is kept in the "kongsi" house, on which each coolie's name is entered, with the number of days he has worked. A circle signifies a full day, and a triangle half a day's work. The penalty for falsification is $40·00, or one month's imprisonment.

Co-operative coolies must work a minimum of 24 days, and the other classes 22 days, a month. In case of sickness, the advancer deducts 90 c. for food the first day lost and 10 c. for each additional day, thus discouraging malingering.

*Coolies' Headman.*—The "kapala," or headman, treats with the advancer on behalf of the gang, who are under his orders, and he is responsible for the work done by them. In addition to one ordinary share in the tin raised, he gets a commission of 50 c. per pikul. The black tin is weighed every evening by a representative

* This is merely a concession to western ideas, and is hardly ever enforced.

Digitized by Google

of the mine owner (to make sure of the amount of royalty due to him) and of the advancer, if he wish it, in the presence of the headman.

At the end of three or six months, as the case may be, the advancer gives notice to the mine owner that he wishes the tin to be sold and accounts settled up. If not already sufficiently clean, the tin is thoroughly washed, bagged, sampled, and weighed, after which it is sold by the company or other mine owner to the best advantage.

"*Sinkhehs.*"—Formerly "sinkhehs" (literally new comers) were imported into Perak and the other Malay States from China by the advancers to work the tin mines. The conditions were so rigorous that many of the coolies lived in a modified form of slavery. Under British rule, nearly all the coolies are free labourers, and the introduction of coolies from China is very strictly supervised by the Government, for their protection. The conditions are :—

(1) The employer must convey the coolie to his place of work free of charge.

(2) In return, the coolie must do 360 full days' work of eight hours each, for which he is to receive $42·00.

(3) The employer must in addition provide the coolie with suitable and sufficient food, lodging, and clothing.

(4) The coolie must work 24 full working days per month, under penalty, except in case of sickness, of 10 c. for each day lost.

(5) If, at the expiration of 360 days' work, the coolie still remain in debt to his employer, then the latter may detain him until the debt is cleared, paying him meanwhile at the rate of 20 c. per day. But in no case may the coolie be detained for longer than two years from the beginning of contract.

For much of this information relative to Chinese mining customs in Perak—which are believed to be unique—the writer is indebted to Mr. W. Cowan, Protector of Chinese for Kinta, than whom, perhaps, no one is a more competent authority on the subject.

*Hydraulic Mines.*—There are two alluvial tin mines in Perak worked by hydraulicking: the Bruseh Mine in the Batang Padang district and the Gopeng Mine in the Kinta district.

*Bruseh Mine.*—The Bruseh Mine is owned by a local syndicate, and is situated 18 miles from the town of Tapah. The extent of the concession is 1,000 acres, of which 600 are estimated to be payable tin-bearing ground. The mine consists of a hillside

Digitized by Google

700 to 800 ft. high, and before it was taken up by the present owners, it had been worked by Malays by ground sluicing for 40 years. The ground is tin bearing from surface down to a depth of 20 ft., with an average yield of 2 to 5 katis (2·6 to 6·5 lb.) of black tin per cubic yard. The water is brought round by a watercourse 5 miles, and down to the working face by 800 ft. $\frac{1}{8}$-in. steel piping, 8 in. diameter, in 6 ft. lengths. The available head of water is 230 ft., giving about 100 lb. working pressure with a 2-in. nozzle. The cost of the pipe line was \$1·50 (3*s.* 3$\frac{3}{4}$*d.*) per foot run delivered on the mine. Transport was here a considerable item, as the pipes had to be brought up by elephants in loads of 350 lb. at a time. The total cost of opening up the mine was \$30,000 (at present exchange say £3,315). When there is a full pressure of water, the monitor is capable of breaking down 300 cub. yd. of washdirt in a working day of 20 hours. A good deal of this consists of hard lumps of clay, difficult to break up, otherwise it is estimated that 500 cub. yd. of ground could be treated in the same time. The owners of the mine consider that they have sufficient tin ground in sight to keep two monitors fully employed for 10 years. The mine, when in full work, returns 200 to 300 pikuls (11·90 to 17·86 tons) of black tin monthly, with a produce of 68 per cent. metallic tin. As there is sufficient water to work a second monitor, which will shortly be erected, the output of the mine will be doubled without a proportionate increase in the working cost.

*Method of Working.*—The washdirt is carried down the hillside from the working face to a series of sluices, in 120 ft. of launders, 1 ft. deep, beginning with a width of 1 ft., and ending 2 ft. 6 in. wide. There is a drop of 48 ft. from the monitor to the launders, and the washdirt flows down a channel to the latter. The launders are lined at sides and bottom with corrugated iron to prevent their being worn out with rough stones, &c. The life of one of these launders, when lined with iron, is three years, whilst without it they only last one year. Bars of wood are nailed across the bottom, zig-zag fashion, to break up the hard lumps of clay. The launders are made in 12 ft. lengths, and cost 21 c. (5$\frac{1}{2}$*d.*) per foot run. At the bottom of the launders the washdirt has to pass through a grating of $\frac{3}{4}$-in. iron bars, 2 in. apart. Any large stones are caught here and picked out from time to time; there is then a fall of 5 ft. to the sluices, tending to further break up the clay lumps. There are 400 ft. of wooden sluices 1 ft. deep with varying widths, thus:—

1st, 50 ft., 3 ft. 6 in. wide.

Digitized by Google

Next, 300 ft., 2 ft. wide (with riffle bars 3 in. wide and 2 in. thick, placed 1 ft. apart).

Last, 50 ft., 4 ft. wide.

The sluices are constructed in lengths of 10 ft., having a drop of 6 in. between each length. Average cost 25 c. (6½*d.*) per foot run. Over 75 per cent. of the black tin saved is caught in the first 50 ft. of sluices, where the washdirt is kept constantly moving with hoes, in the same way as in the ordinary sluice box. Stones are picked out with rakes.

The riffle bars are removed when it is desired to clean out the tin from the middle part of the sluice. The ore from here and from the bottom 50 ft. of the sluice is rewashed in the top box. A product of 50 per cent. metallic is obtained from the sluices; this is rewashed in a small sluice box of the kind previously described, and concentrated by hand jigging with sieves.

The last 50 ft. of the sluices have been widened to 4 ft. with a view to rewashing all the tin there, and thus doing away with the sluice box. At Bruseh one man (a Malay) cleans 8 pikuls (9·52 cwt.) of black tin per diem. The tail race is 1½ miles long, 1 ft. 6 in. wide and 2 ft. 6 in. deep. It costs $10 (£1 2*s.*) per month to maintain in good order, and is cleaned up once in six months, when a little tin is recovered. The total loss of tin is about 5 per cent. The system of working is to cut down ground with the monitor for 20 hours, and then to flush the sluices with clean water, and clean up the tin during the remaining four hours; the latter operation is of course done by day.

The Bruseh Mine is notable as one of the very few in Perak where (by good management) Malay labour is used successfully; 25 men are employed altogether, two for the monitor, and six for the sluices, working in three shifts of four hours on and eight hours off. The rates of wages paid are:—

| | $ | c. | | £ | *s.* | *d.* |
|---|---|---|---|---|---|---|
| Foreman (half caste), per month .. .. | 50 | 00 | or | 5 | 10 | 7 |
| Chief Chinese washers (for first 50 ft. of sluices), per month .. .. .. | 20 | 00 | ,, | 2 | 4 | 2 |
| Second Chinese washers, per day .. .. | 0 | 60 | ,, | 0 | 1 | 3¾ |
| Malay washers, per day .. .. .. | 0 | 40 | ,, | 0 | 0 | 10½ |
| Malay monitor men, per day .. .. | 0 | 50 | ,, | 0 | 1 | 1½ |

The owners provide free quarters for the men and free transport for their food.

*Gopeng Mine.*—The Gopeng Mine, owned by the Gopeng Tin Mining Company, Limited, of Redruth, Cornwall, is situated near

Digitized by Google

the town, from which it takes its name. The area of the concession is 500 acres, the average depth of washdirt 12 ft., and the yield of same about 2 katis (2·6 lb.) of tin oxide per cubic yard. There is no overburden to be removed. There are 2½ miles of watercourse and 5 miles of ⅛-in. steel piping 12 to 13 in. diameter, in 12 ft. lengths, with telescopic joints. The total cost of opening up the mine and laying the pipe line was about £6,000. The inclusive cost of laying a pipe line of these dimensions in Perak may be taken as about £1,000 per mile. The monitor has a 2-in. nozzle. It is employed in cutting ground for 14 hours, the remaining 10 hours being for washing up the tin.

The monitor works from 4 P.M. to 6 A.M., and washing up takes place from 6 A.M to 4 P.M. The head of water available is 249 ft., giving a working pressure of about 108 lb. The ground being soft is broken up by the monitor at the rate of 500 cub. yd. in 14 hours. The system of washing is different to that at Bruseh. Here there are no sluices or riffles, but simply a long ditch in which 40 Malay women are stationed at intervals. They catch the tin dirt as it flows past them in a wooden dish called a "dulang," similar in shape and size to the South American gold washing "batea." They are paid 40 c. (10½*d.*) per day, and but very little tin, it is claimed, escapes in the tail race.

This Company has yielded a good return during the last four years on the capital invested.

*Gold in Tin.*—In the Batang Padang district of Perak, gold is frequently found in the tin alluvial. It occurs, of course, in the free state, is very finely divided, and runs about 0·910 fine. It is simply washed out of the clean black tin with a "dulang." M. Errington de la Croix (*Les Mines d'Etain de Perak*, Paris, 1882) gives the average gold contents of black tin in this district in 1880 as 2 chees (4 dwt. 16 gr.) to the pikul, equivalent to 3 oz. 5 dwt. 4 gr. of gold to the ton of black tin. One of the richest tin mines for gold in Batang Padang is the Klian Bahru (or New Mine). The washdirt consists chiefly of decomposed quartz, and is 15 ft. deep, whilst the bed rock is clay slate. The black tin contains gold to the value of $16 (Straits), or 8 dwt. 6 gr. per pikul, being at the rate of 6 oz. 18 dwt. 14 gr. per ton. The value of the washdirt being about 2 katis (2·6 lb.) of tin to the cubic yard, it may be assumed to run 3·84 gr. of gold per ton.

*Wolfram.*—The Batang Padang district is the only one in Perak where wolfram is to be found associated with the tin alluvial in any quantity. At the Chumor Mine, 3 miles from Tapah, wolfram occurs in solid lumps up to 2 or 3 in. big, mixed

Digitized by Google

with the tin, the country rock being granite. Mr. Kitto's assay of this tin showed 69·64 per cent. metallic.

"*Bukit Mas*."—In this same district, 1½ miles from Tapah, is situated the only gold reef which has as yet been discovered in Perak. Some alluvial gold being found in the neighbourhood led to the opening up of the mine about three years ago. It is called the "Bukit Mas" (or Gold Hill), the name showing that the existence of gold in the neighourhood had been previously known to the Malays. The strike of the reef is approximately N. and S., and the dip W. 70°. Its width, as exposed in the upper workings, averaged 4 ft. Some of the quartz taken from them is stated to have run as high as 7 oz. per ton, but its average value was probably from 1½ to 2 oz. The country rock is schistose slate, and is easily worked, hardly any blasting ground having been met with so far. Indeed, the trouble underground is rather that close timbering is required. The ore is free milling, and the bullion extracted has been about 0·850 fine. The mine was worked by a series of levels driven in a hillside, but now a shaft has been sunk in the valley at the bottom. The dimensions of this shaft are 3 × 3 ft. inside timbers, and it is 100 ft. deep. The ground being very heavy, it is closely timbered with sawn timber. In July, 1896, a cross-cut was being driven from this shaft with a view of cutting the reef, which it was expected to do in 150 ft. of driving. The presence of the reef was indicated by a borehole put down from surface, at a point 44 ft. below the level of the brace of shaft. The reef was cut at 56 ft. down, carrying about ½ oz. gold per ton. The Perak Government provided the diamond drill and accessories, and the then owners of the mine (a Penang company) the labour. The water, which is comparatively rather heavy, is raised from the mine by a double action Worthington pump at the bottom of the shaft. Its capacity is 2,500 gallons per hour, with 60 lbs. of steam. The intake pipe is 3 in., and the delivery 2½ in. diameter. Ore and waste are raised in iron kibbles having a capacity of 4 cwt., and the ore is trammed to the mill in trucks holding 5 cwt; ¼-in. steel wire rope is used for hoisting. The engine is an ordinary ship's steam winch, its strength and simple construction rendering it suitable for a small mine, worked with unskilled labour. The miners are all Chinese, and have had no previous underground experience. About 50 labourers are employed altogether. Contract price for driving 20 ft. of crosscut 7 × 5 ft. in running ground, $1·50 (3*s.* 3¾*d.*) per foot, the owners finding timber and all materials. Prices of timber delivered on the mine:—Side pieces, 7 ft. 6 in. long, 3 in. diameter, 15 c. (4*d.*)

Digitized by Google

per foot run. Cap pieces, 5 ft. 6 in., 3 in. diameter, 10 c. (2¾*d.*) per foot. Cost per set, $1·67 (3*s.* 8¼*d.*).

Side laths, 4 ft. long, 2 in. diameter, 10 c. per foot.

Firewood, $10·00 (£1 2*s.*) per cord, 20 × 6 × 2½ ft., being 3 c. (or a little over ¾*d.*) per linear foot. The mill is of 10 stamps in two batteries of 5 heads. It is of the Australian pattern, and was made entirely in Perak, at Messrs. Mitchell's foundry at Ipoh, being a very creditable piece of work with the existing appliances. The falling weight per stamp is 900 lb., and the mill is run at 65 drops per minute with an 8-in. drop. The screens are of punched iron, and are 60 mesh. The batteries are fed by hand. The tables are 18 ft. long, being a series of three copper plates, each 6 ft. long by 3 ft. wide. At the bottom of the plates the pulp passes over two shaking tables, driven by countershafting from the engine. These have two compartments, each 1 ft. 6 in. long. It then passes over blanket strakes 15 ft. 6 in. long and 1 ft. 6 in. wide. The tailings are caught in settling pits, and dumped for future retreatment. There were about 2,000 tons on the mine assaying from 5 to 14 dwt. at the time of the writer's visit. The cyanide process has been tried experimentally on them with success. The original working capital of the Bukit Mas was only $12,000 (at present rates say £1,326). All further cost of machinery and other improvements has been defrayed out of the gold raised from the mine, in the first instance extracted by a small 3-stamp battery of 100 lb. heads. The mine has lately been taken over by a Dublin company, who have added 10 additional head of stamps, and are reported to be opening up the mine on a considerably larger scale with encouraging results. It seems to be a fair inference that more vigorous prospecting in an almost untrodden jungle will reveal the existence of other payable gold reefs in this part of Perak. The Bukit Mas, a gold mine in miniature, yet rivalling in its results many far more pretentious concerns in some of our other Colonies, has, therefore, been described in some detail, as the pioneer of what may yet prove a remunerative gold mining district. The contention of the State Geologist in the *Perak Annual Handbook* (1892, and since defunct)—already commented on by the late Mr. Becher (*op. cit.*)—that the discovery of gold in Perak is to be deprecated, because the influx of an undesirable class of European immigrants follows in its train, is one which will hardly meet with much sympathy from members of this Institution.

*Chinese tin smelting.*—The Chinese system of tin smelting is carried out either in a draught or in a blast furnace. The latter

Digitized by Google

being the most commonly seen, will be described here. Ti-Lee & Co.'s smelting house at Batu Gajah is as good an example of works of this kind as is to be found in Perak. There are eight furnaces, having each a capacity of 10 pikuls (or very nearly 12 cwt.) of black tin in 24 hours. The daily capacity of the works is accordingly about 4¾ tons. The black tin comes from the mines in bags of 80 katis (104 lb.) each, and is, as a rule, not so clean as that sold to the European buyers. It often does not run more than 50 per cent. metallic, in which case it is re-washed at the works in a small sluice box, until it contains 65 to 70 per cent. of metal. Taking the average produce of the black tin smelted at 67 per cent., and the loss in smelting at 4 per cent., the output of metal is 3·86 tons in 24 hours. The bottom of the furnace consists of a round basin of ½-in. cast iron, 2 ft. diameter, and 1 ft. deep. This is made in China, and of Chinese iron, and the Chinese declare that it lasts longer than when cast of English iron. This statement is borne out by an experienced English tin smelter in the East, but no one seems able to offer any suggestion as to the reason. The superstructure of the furnace is built upon top of this iron basin. It is made of a refractory clay, obtained locally, mixed with quartz sand, and with raw sugar to give cohesion. It is 4 ft. high, and 2 ft. 6 in. diameter at the top. It is bound round with rings of ½-in. iron at intervals of 1 ft., and supported vertically by ¼-in. iron bars, 1 in. from each other at the bottom of the furnace. There are thus four rings and 12 bars. The basin carrying this furnace is raised 1 ft. 6 in. above the ground on a ring of ½-in. iron, supported by four bars of ¾-in. round iron. The furnace is inclined outwards from the bottom about 5°, but for what particular reason is not apparent. It is stirred and tapped through a hole 3 in. diameter, situated 6 in. above the centre of the bottom of furnace. This hole is bound with a ring of ½-in. iron. The molten tin and slag are tapped into an oval basin let into the ground in front of the bottom of furnace. This is 1 ft. 6 in. diameter, and 6 in. deep, and is cast locally of ½-in. English iron. The tuyère is of iron, and is 2 in. diameter. It is let into the opposite side of the furnace to the tapping hole, and is 6 in. above the bottom of furnace. The bellows are made of the trunk of a tree hollowed out. Dimensions:—Length, 9 ft., diameter 9 in. There is a leather valve 3 in. diameter at each end of the trunk. The bellows are blown by a coolie, running backwards and forwards, and pulling in and out of the trunk by a wooden handle a rod of ¾-in. iron 6 ft. long. The bellows are not laid truly horizontal, but are inclined upwards about 10° from the

Digitized by Google

end where the coolie is pulling. There are four men to each furnace. They work two at a time, one pulling the bellows, and the other attending to the furnace, turn and turn about, in shifts of six hours on and six hours off, thus working 12 hours in the 24. For this they receive $5·00 between the gang of four, or $1·25 (2*s.* 9*d.*) each daily. The longer hours, the heat, and the night-work account for the comparatively high rate of pay, but no doubt the employer works them on the truck system as at the mines. According to the Chinese foreman of the works, the furnace is charged from the top with equal proportions of tin ore and charcoal, except when the ore is dirty, when more charcoal is added. Considering that everything is done by rule of thumb, and often guesswork, the Chinese system is certainly very successful. The fire is started with wood. Charcoal costs 50 c. to 60 c. (1*s.* 1¼*d.* to 1*s.* 4*d.*) per pikul (133⅓ lb.) delivered on the works, having to be brought some distance. Perak is very thickly wooded, and, so far, the government have imposed but very little restriction on wood-cutting and charcoal-burning. When the contents of the furnace shows signs of caking, it is stirred by a rod of ½-in. iron, 2 ft. long, attached to a wooden handle 4 ft. long. The furnace is tapped as already described, after which the tapping hole is stopped up with clay. The molten tin is taken out of the basin before the slag is allowed to run into it. It is carried in an iron ladle with a handle 5 ft. long, and holding 20 katis (26 lb.). It is poured into sand moulds, and by this means ingots of 90 katis (1 cwt.) are obtained. When the mould is full, the dross is scraped off with a piece of wood (and subsequently re-smelted), until a perfectly smooth surface is got. The ingots from the first smelting are 1 ft. 6 in. long at the top, and 6 in. thick. They contain about 0·5 per cent. impurity, chiefly iron, and in this state they are marketable in the East. The life of a furnace as described is about two years. The outside cost would probably be about $50·00 (£5 10*s.* 4¾*d.*), distributed something like this:—

| | $ | c. |
|---|---|---|
| Iron, with transport .. .. .. | 25 | 00 |
| Clay, sand, &c., with transport .. | 5 | 00 |
| Bellows .. .. .. .. .. | 10 | 00 |
| Labour .. .. .. .. .. | 10 | 00 |
| | 50 | 00 |

The furnaces run without intermission for 30 days, when they are blown out for repairs. The first smelting recovers some

Digitized by Google

40 per cent. of the metallic contents of the ore. The tin slags are broken up small and re-smelted, as often sometimes as six or seven times, until it is considered that no more tin can be got out of them. The re-smelting of slags, although conducted in the same furnace, is kept separate from the first smelting of clean tin, and more charcoal is added than in the first case. Iron is not added by the Chinese at any time during the process. The slag ingots are semi-oval, being 9 in. long at the top, and 3 in. high, with a weight of 30 katis (39 lb.). They contain about 95 per cent. tin, and are sent to Chinese works at Penang to be refined.

The slags after re-smelting are crushed fine with a small stamper, such as is used for crushing sugar cane. This, though a common feature in tropical countries, may be new to several. It consists of an iron head weighing, say, 50 lb., beating into a hollow 1 ft. 3 in. diameter, and 6 in. deep, cut out of a block of granite. A beam 6 ft. long is attached to the wooden stem, carrying the stamp head, and it is worked up and down by two coolies with their feet. The final slags, after being crushed fine, are washed up in the sluice box for the prills of metal which they contain. This tin, and the dross from the scrapings of the ingots, are re-smelted, when a sufficient quantity has accumulated, in a circular iron pot, 2 ft. 6 in. diameter, and 1 ft. 6 in. deep in the centre, set in a small separate clay furnace. The resultant tin is cast into ingots and sent to the refinery. The total loss of metal in all the above operations is not supposed to exceed 3 to 4 per cent. When the tin ore contains too much iron or arsenical pyrites to smelt direct, it is subjected to a preliminary roasting in a small single hearth reverberatory furnace, which being similar to the ordinary pattern, calls for no particular remark. Only a few Chinese smelting houses have a roasting furnace, and, as a rule, the Chinese do not purchase willingly ore difficult of treatment.

However absurd and primitive the Chinese method of tin smelting may seem, over three-fourths of the tin output of Perak (viz., 16,694·09 tons out of a total of 21,356·13 tons), and hence no inconsiderable proportion of that of the whole world are smelted by it. It is unfortunately impossible to obtain any reliable data as to actual cost per ton of this process, but it is doubtless a profitable. Many Chinese have done, and are still doing, very well at it.

*Prospecting.*—Prospecting for tin bearing alluvial is carried out by Chinese in a very rough and ready fashion. Small pits or trenches are sunk where washdirt is supposed to exist, until it is

Digitized by Google

reached, or hope of striking it is abandoned. The richness of the washdirt is tested by washing in a "tempurong," or cocoanut shell cut in half. This does not sound a very promising method, but the Chinese are very expert at it, and when carefully done, a very fair estimate of the value of the ore can be obtained.

*Boring.*—Various tentative boreholes in search of tin alluvial have been put down with the diamond drill in different parts of the state at government expense, but the results obtained do not appear to have been commensurate with the outlay.

That able administrator and accomplished writer, Sir Frank Swettenham, K.C.M.G., Resident-General of the Federated Malay States, has pithily compared the European and Chinese systems of prospecting in his charming little book, *About Perak* (*Straits Times*, Singapore, 1893). As this work is not generally available in England, a quotation from his description may be admissible:—

"It is the unevenness of these deposits that makes alluvial tin mining so risky a venture. The risk of loss, but possibility of large profit, attracts the gambling instincts of the Chinese; but this insecurity deters Europeans, whose ways are not the ways of the Celestial. It might naturally be thought that careful boring would show where the tin is, how thick the washdirt, and how extensive its area. Theoretically this is so; practically the opening of the ground alone gives certainty. The boring tools will not show tin where there is none; but in this water-charged gravelly soil the instrument in passing through a thin layer of washdirt often carries down with it to a considerable distance the stones and heavy particles of ore, so that when the tube is withdrawn it shows traces of tin through a much greater depth than that of the actual tin-bearing stratum. European companies founded on the results of boring tools have had occasion to regret the hopes built on the performance of this instrument. No doubt careful handling will do much, and the reverse is largely responsible for unreliable results; but the fact remains that boring alone is not a perfect test of the ground."

*Sir Frank Swettenham on Tin Mining.*—The same gentleman's remarks contrasting European and Chinese methods in Perak also appear worthy of reproduction:—

"It is, however, enough to say that a Malay 'Pawang' (medicine man) has the same sort of nose for tin that a truffle dog has for truffles. At least, that is so with the Perak 'Pawang,' and, what is of more importance, the Chinaman believes in him. Usually too the Malay proves his confidence in his own powers by digging a

Digitized by Google

small hole and showing the ore. This is more than enough for a Chinaman, who straightway buys, or more commonly agrees to take the land on tribute. He finds the capital and a palm shed, where the labourers, who usually have a share in the mine, live. Before any pumping machinery is necessary, it has usually been ascertained by the removal of the overburden, what the washdirt is worth. If the whole thing is a failure, the capitalist loses a little and the labourers make nothing; if there is a small quantity of ore, the capitalist loses nothing. But the total failures are very rare, and it mostly happens that when the advancer has recovered all his expenses, his interest, and his commission, and his, the lion's, share of the profits, there will still be a fair amount to divide among the labourers. Two very significant facts prove this: one, that this form of work is mightily popular, and the other, that disputes between advancer and coolies are very uncommon. * * * * A little careful enquiry will satisfy the most curious that the most successful Chinese miners do not owe the bulk of their wealth to tin, but to other adventitious circumstances, such as the holding of revenue farms [Sir Frank Swettenham refers to the gambling, opium, and spirit farms annually let by tender by the Perak Government, F. O.], and the various resources of that business which is covered by the term 'thauke' labour or mining advancer. But even where a European will work intelligently, where he does not insist that what he has learnt before must be the correct plan here, where his ground is good, and he works skilfully, honestly, and economically, even should he be the only European on the mine, he is denied the avenues of profit open to the Chinese advancer, and his salary alone would mean a fair profit to a Chinaman."

*Lode Mining.*—All reports to the contrary notwithstanding, no true tin lodes have as yet been discovered in Perak. In most instances the so-called lodes have proved to be either small gash veins or leaders with no permanency in depth. The Government Report for 1895 says:—"Though great hopes have been entertained in this direction, no definite proofs have been found of the existence of lodes." Much English and Eastern capital has been expended in attempts at lode mining in Perak, and much loss and disappointment have been the unvarying result. The last lode mining enterprise in the state, the Malacca Tin Mining Company, Limited, closed down their mine near Ipoh early in 1896. It was understood that the working capital had proved insufficient, owing to the extremely treacherous nature of the ground to be mined.

Digitized by Google

There seems, however, a reasonable probability to suppose that when the more easily worked alluvial becomes exhausted, more careful and systematic prospecting—which has as yet been very perfunctory—might lead to the discovery of payable tin lodes, such as are being worked at Kuantan, in Pahang (the Pahang Corporation, Limited). A considerable revival in the price of tin must take place before any activity in this direction can be looked for.

*Stockworks.*—Mr. Becher said in his paper (*Trans.*, vol. i, Part I, p. 86) :—"If the writer's opinion is correct, these solid deposits will prove to be of the nature of the 'Stockwerke' of Altenberg and Zinnwald, in the Saxon and Bohemian Erzgebirge." It is pleasant to record that this forecast has been verified, and that just such a stockwork has been found under the wash-dirt (of the class referred to in this paper as "surface alluvial") at a mine near Ipoh, Kinta. A somewhat similar deposit is now being worked at Kuchai, in Selangor, by the Malay States Tin Mining Company, Limited.

*Mining Laws.*—The land tenure in Perak for mining, as well as agricultural purposes, is under the "Torrens system," as in Australia. Leases are granted for 21 years at $1 per acre per year quit rent. The holder of a lease is entitled to the water rights and timber on his land. Mining must be commenced within 12 months after the lease has been granted. At the expiration of the first year of working (practically the second year of holding the land) one coolie must be employed per acre. Any machinery erected or water power brought round is taken as equivalent to eight coolies per unit of horse power developed. Each owner or lessee of a mine must take out a mining licence every six months, for which he pays $5·0. Prospecting licences are issued free, giving a right to prospect up to 500 acres of land not already alienated. For a larger area than this a special licence is required, costing—

| | $ | c. |
|---|---|---|
| On application .. .. .. .. | 1 | 00 |
| For six months .. .. .. .. | 25 | 00 |
| Renewal for six months more.. .. | 50 | 00 |

In fact, the total fees for one year are $76·00. This special licence gives the prior right to select any block of 50 acres in the area prospected. "Ancestral" lands of the Malays are exempt from interference.

The present code came into force in August, 1895. The mining



Digitized by Google

regulations are enforced by a warden of mines, with four inspectors working under him—two for the Kinta district, one for Kuala Kangsar, and one for Batang Padang.

*Value of Tin Alluvial.*—To give some idea of how rich some of the Perak tin gravels have been, a list of 12 samples, taken about two years ago by the State Geologist from Chinese mines in the neighbourhood of Taiping, is appended:—

| No. | Lb. of black tin per cub. yd. |
|---|---|
| 1 | 77·375 |
| 2 | 22·793 |
| 3 | 20·220 |
| 4 | 18·719 |
| 5 | 17·899 |
| 6 | 15·864 |
| 7 | 15·327 |
| 8 | 15·044 |
| 9 | 12·894 |
| 10 | 10·299 |
| 11 | 10·179 |
| 12 | 5·455 |

Average of 11 samples = 14·972 lb. per cub. yd. The first sample, being of quite exceptional richness, is omitted in taking the average. With metallic tin at $32·00 per pikul (at the mean rate of exchange taken in this paper) = £59 8*s.* 4*d.* per ton, and assuming the produce to be 70 per cent., the mean value of the 11 samples works out at $2·51 (5*s.* 6½*d.*) per cub. yd. The average value of alluvial throughout the state is nothing like so high as this at the present time; 2 to 4 katis (2·6 to 5·2 lb.), equivalent on the same basis to 64 c. to $1·28 (1*s.* 5*d.* to 2*s.* 10*d.*) per cub. yd., would be a good deal nearer the mark. Perhaps it would not be far out to say that 1 kati (1·3 lb.) of black tin (= 32 c., or 8½*d.*) to the cub. yd. about represents the limit of payable washdirt with an average alluvial mine in Perak at present rates.

*Duration of Alluvial.*—In considering the alluvial tin deposits of Perak, and of the Malay Peninsula generally, one hardly knows whether to be more impressed with their extent or their general richness. Anyone knowing the country would be inclined to agree with the Rev. J. E. Tenison Woods, as quoted by Mr. Becher, that they are "the richest in the world." Whether they are, as the same eminent authority has declared, "practically

Digitized by Google

inexhaustible," and "we are as yet only on the threshold of our discoveries," opens up rather a different train of thought.

It is not open to doubt that there yet exists in Perak an immense reserve of alluvial tin. Although many of the richer and more easily worked deposits have been, and are being, worked out, there must still remain large tracts of good tin-bearing land covered with dense jungle. It would accordingly be quite futile to attempt to estimate, with any approach to accuracy, the tin reserves of this state. Both in Perak and in the other Malay States a considerable proportion of the land under cultivation for coffee and other crops is known to be tin-bearing. To take one instance, the Lincoln and Hawthornden coffee estates in Selangor, 750 acres in extent, are stanniferous pretty well right through. Their tin value is well known to the Chinese, who are continually making application to the owners to let the land on tribute for mining. As the latter have now several thousand very fine coffee trees bearing, they do not see their way to accept any such proposals.

Large tracts of tin alluvial are being opened up at Bentong and elsewhere in Pahang, as also in the British Protected States of Sungei Ujong and Negri Sembilan. In this connection it may be mentioned that an assay of Bentong alluvial tin by Mr. Kitto showed 77 per cent. metallic produce. The theoretical percentage being 78·7, it would be interesting to know if anyone is acquainted with purer oxide than this. Besides, the Native States of Patani, Kedah, Legai, Kelantan, and Trenganu, lying between British Malaya and Siam (and protected by the government of the latter), are credibly reported to be rich in tin, both alluvial and lode, as well as gold alluvial and quartz reefs. These will, however, require a good deal in the way of opening up communication, from all one can gather, before very much can be done. In Trenganu, the Bundi Tin Mining Syndicate (Limited) are already at work, and some magnificent specimens of lodestuff have been exhibited in Singapore.

*Future of Tin in Perak.*—It is the opinion of those on the spot best qualified to judge, that any further considerable drop in the already low price of tin, although restricted output in part will undoubtedly result, will be principally met by a reduction in the wages paid to Chinese mining coolies. It should be mentioned that these are now considerably higher than were paid in the earlier and palmy days of Perak mining, and are about double what the coolie could earn at agriculture or any other form of unskilled manual labour. From the detailed statement previously



Digitized by Google

given, it will be seen that a co-operative mining coolie can earn as much as $9·50 (£1 1*s.*) nett in 25 working days—*i.e.*, after paying for his food and opium. The gross earnings of the highest paid class of Tamil labourers on coffee estates do not amount to more than $8·00 (17*s.* 8*d.*) in the same time, and out of this they have to pay for their food. The writer has been assured that even this is about double the pay the same class of coolie would get in India or Ceylon.

It is plain, then, that a considerable reduction might possibly be effected in the wages paid to Chinese mining coolies, who even then would have, for them, a living wage, and very much in excess of what they could earn as labourers in their own country.

Consequently it is difficult to fix an absolutely minimum price of tin at which mining would cease to be profitable in Perak. Mr. Strauss, M.P., in a speech at Redruth on November 7, 1896, quoting from a letter received from his correspondents in the East, said:—"It is a fact that the average tin mine does no longer pay, and this fact is proved by the government having again reduced the export duty on tin, and this time for all the Native States. . . . The government would certainly not have sanctioned such steps, if they were not necessary for keeping up the production of tin, from which the Native States derive almost exclusively their revenue." With all due deference to such an unquestioned authority on tin as Mr. Strauss, the general consensus of expert opinion on the spot seems to be that with tin at less than $28·00 to $30·00 per pikul (at present rates, say, £52 9*s.* 9*d.* to £55 14*s.* per ton), most of the mines in Perak, except those extremely favourably situated, would not be working at a profit.

In conclusion, the writer makes no pretence whatever to be an expert on tin, but simply records the results of observations made during a tour through the native Malay States. The present critical condition of tin mining at home, and the fact that so little appears to be known by many in this country as to the conditions under which mining is carried on in those states, are the excuse for a paper of this kind with all its shortcomings.

---

## DISCUSSION.

**Mr. A. Strauss, M.P.**, said that there was only one fault to be found with the paper, and that was that it was evidently written

Digitized by Google

more than a year ago, and was therefore somewhat antiquated, because he observed that the production of tin in England was given as being 7,500 tons. In 1896 it was virtually only 5,000 tons; so that a very approximate idea of the date on which the paper was written could be formed. He thought that the paper clearly showed how tin mining ought not to be conducted. It must not be forgotten that the Straits were part of Her Majesty's Dominions, and as such had to compete with the whole industry; and it was therefore only right and just that the same restrictions which were put upon tin mining in Cornwall should in some degree be imposed upon tin mining in the Straits. There was one serious omission in the paper which he should have liked to have seen remarked upon, and that was the very bad system which existed in most of the colonies in trying to show that the trade of that particular colony was vastly improving every year. In this particular case they would see that the Resident-General, Sir Frank Swettenham, was evidently endeavouring to show to the Colonial Office over here that the exports and imports were growing every year. In this instance such a course was distinctly against the wish of the people themselves, who saw their country being worked out, and it was also against the wish of the mine owners, because they were obliged to work the rich part of their mines only owing to the great competition which prevailed. They not only worked out the rich portions of their properties, but they also destroyed the poorer portions by throwing the over burden on them. In addition to this, there was a competition amongst the various Under-Residents in the several Malay States, each trying to show as great a production as possible, and the consequence was that the country was being worked out at a great rate. Such a state of things was against the wish of the mine owners, and certainly against the wish of the tin miners in Cornwall, because he was afraid they would perish before the Straits tin mining was worked out. In saying that the paper showed how tin mining should not be conducted, he referred more particularly to the truck system. In that particular colony, which was practically directed by the Colonial Office over here, there was a system of what amounted to buying and selling coolies. If they looked at the conditions on which the coolies were hired, it would be found that they must work for over two years at an absurdly low wage. England was not able to stop that sort of thing in South America or Central Africa, but he was quite sure it ought to be stopped in any part of the Empire over which the Colonial Office had control. In addition to this buying and

Digitized by Google

selling of coolies there were very heavy fines for the slightest misdemeanour on their part, and, worse than all, they did not get their wages in money, but received it in opium and spirits. The consequence was that a system prevailed against which the home country had to compete. The Cornish miners lived under entirely different laws, with no truck system and no coolies; but the people here had to compete with the Chinamen out there. Inquiries at the Colonial Office would, of course, simply elicit the reply that the colonies had to be governed in their own fashion, but it seemed to him that seeing they stopped the sale of spirits in Africa wherever possible, they should do the same in the Straits.

He thought the paper was more complete than any he had seen dealing with a similar subject, and although the remarks he had made were not strictly on the paper, yet, knowing the great importance of the Institution, and how widely the papers read there were circulated, he thought that his remarks might not be inopportune, and trusted that they might reach either Sir Frank Swettenham or those who had any part in the direction of the Colonial Office.

**Mr. Rickard** was glad to see that Mr. Strauss had come forward as the champion of a suffering British industry, viz., Cornish tin mining. When Mr. Strauss spoke of the equality of restrictions, he (Mr. Rickard) thought that that was not exactly what he meant, because in some respects tin mining in Perak laboured under greater disadvantages than tin mining in Cornwall. In the first place the royalties in Cornwall were about $\frac{1}{20}$th, while in Perak they were about 15 per cent. Again, there was a charge amounting to about 11 per cent. upon the value of the metallic tin for export duty, and, in addition, there was a third charge of about £9 per ton for the expense of marketing and getting it down from the mines to the port. These three taxes placed a very great handicap upon the production of tin in Perak, which without them would unquestionably swamp our industry beyond the possibility of continuing it. There was, however, a set off in regard to the gold contained in the tin. The gold seemed to be a very important element in the value of the ore, and was valued at something like £13 per ton.

**Mr. Kitto** pointed out that this was very exceptional, and only occurred in one or two cases.

**Mr. Rickard,** continuing, said that Mr. de la Croix, whose report was quoted in the paper, gave the average gold contents of black tin as being 3 oz. 5 dwt. 4 gr. of gold to the ton of black

Digitized by Google

tin. He was pleased to be corrected, because it seemed to be remarkable that there should be so much gold in the tin. It was easily extracted, as they got it simply by sifting, and the whole of the gold was got out without any process of milling.

The tin industry was essentially a British industry, and he quite agreed with Mr. Strauss that we were too indifferent to this fact. As regards the outlet for tin production, it seemed to him that the figures given in the tables as from 1891 to 1895 were very nearly coincident with the decline in the price of silver, and he thought that was a consideration in connection with the working of tin mines in Perak, and particularly the price of tin in this country, which had to be considered, and which was in fact the most prominent feature in connection with the whole statement, although it had not been brought out in evidence. He understood that the dollar mentioned was the silver dollar, which had depreciated in the same proportion as the price of silver as compared with its former par value.

With regard to the formation, it was exactly what he should expect to find. It was granitic rock, the detritus of granitic rock for the most part, and was another case which accentuated the fact that there was most always associated with tin, granitic and granitoid rocks.

The **President** then stated that the following paper would be taken as read :—

Digitized by Google

## "Note on the so-called 'Selective Action' of Cyanide of Potassium for Gold."

By W. A. Dixon, M.Inst.M.M.

For some years past there has been considerable discussion as to a "selective action" exhibited by largely diluted solutions of cyanide of potassium for gold, so that it passes into the liquid as aurocyanide of potassium, whilst the base metals are left behind in the ore mass during treatment by the cyanide process. This is held to be the reverse of what occurs when a more concentrated solution of cyanide is employed, as in that case a large proportion of base metal in comparison to the gold is obtained in solution. The following considerations will show how this occurs, and that there is really no such thing as "selective action." By a selective action it seems to be generally understood that in the weak solution the action is the reverse of what it is in a strong one, an idea of volition on the part of the cyanide being implied in the statement.

The reaction by which gold is dissolved by cyanide of potassium is

$$2Au + 4KCy + O + H_2O = 2AuKCy_2 + 2KHO,$$

the oxygen being supplied by that present in solution in the water, or by oxidising agents, as chlorine, bromine, ferricyanides, peroxides, &c.; in practice the first is the usual source.

A ton of ore in powder requires from 100 to 110 gallons of water to thoroughly wet it, or, say, an average of 105 gallons, which at 70,000 grains per gallon is equal to 7,350,000 grains. The coefficient of solubility of oxygen at 30 in. barometric pressure and 60° F. is 0·0295, which divided by 5 to reduce it to that due to the partial pressure of oxygen in air, gives as the coefficient of absorption of oxygen from air 0·0059, so that 105 gallons of water would contain 43,383 grain measures of oxygen in solution, which would weigh 62 grains. These 62 grains of oxygen contained in 105 gallons, as a maximum, would, in conjunction with cyanide of potassium, dissolve 1,527 grains of gold,

Digitized by Google

that is, 3 oz. 3 dwt. 15 gr., and the quantity of cyanide required would be 1,001 grains, so that the solution would be very dilute, containing only 0·0047 per cent. of cyanogen.

It appears clear that we have here a sufficient explanation of the so-called "selective action." Gold in presence of oxygen has in all cases a superior affinity for soluble cyanides, or the soluble cyanides have for gold, than the soluble cyanides have for the compounds of the base metals. These compounds have the same affinity for cyanogen whether oxygen in the free state or easily available is present or not, whilst if oxygen is absent the action on gold is *nil*. The base metals always occur in gold ores as oxides, sulphides, or other compounds, whilst the gold is in the free state. In these circumstances the gold is first dissolved as long as free oxygen is available, and then, oxygen being exhausted, base metals pass into solution until either they are exhausted or the cyanide is saturated, whichever happens first, a sufficient time being given to complete the reaction. A much diluted solution of cyanide contains much free oxygen *in proportion to the cyanide*, and therefore dissolves much gold *in proportion to the cyanide present*, and afterwards little base metal, because there is little cyanide left to saturate, and it therefore *appears* that the cyanide has selected the gold. In a solution containing more cyanide, gold is dissolved till the oxygen is exhausted, and then the excess of cyanide enters into double decomposition with the compounds of the base metals, which are then found in solution in greater proportion relatively to the gold, and the solution *appears* to have had a selective action on them.

Some metals in the free state, as zinc, for example, have a superior affinity for cyanogen to gold, but these do not occur free in ores, but when a solution containing gold as cyanide is brought in contact with one of them, as zinc, it dissolves, and the gold is precipitated. Zinc, which is commonly used for this purpose, is moreover known to precipitate gold the more efficiently the more free it is from compounds such as its oxide.

In practical work the oxygen in solution in the water used would be much less than that indicated, as it would be removed by organic and mineral substances undergoing oxidation, but, on the other hand, minerals treated by the cyanide process have usually much less gold than 3 oz. per ton, or they are treated several times with fresh solutions. This re-treatment is simply a renewal of the conditions favourable to the solution of gold, an oxygen-holding solution of cyanide replacing one which is exhausted of that element.

Digitized by Google

In the current literature on this subject two distinct sets of reactions have become mixed up, and are spoken of as one, the substances which cause them being called "cyanicides." This word should be confined to those substances which by their action on cyanides decompose them, or set free hydrocyanic acid, which soon decomposes. These substances do not combine with cyanogen or alkaline cyanides; they kill them, and to such the word cyanicide is truly applicable. On the other hand, "cyanicide" is not applicable to substances which by entering into combination with cyanogen or cyanides may be rather regarded as causing sleep rather than death, and it is only on these that the so-called "selective action" can be exercised, and the compounds of only three of these are found in gold ores, namely, iron, copper, and zinc. Iron present in the ferric state may be inert or act as a cyanicide if present as a salt, *i.e.*, as ferric sulphate; in the ferrous state it combines with cyanide of potassium to form ferrocyanide of potassium, but this also dissolves gold if sufficient oxygen is present, by the reaction

$$6Au + 2K_4FeCy_6 + 4O + H_2O = 6AuKCy_2 + 2KHO + Fe_2O_3,$$

and therefore it is not entitled to a position amongst the metals which may be selected. These are therefore reduced to zinc and copper, and the compounds of these are only dissolved in absence of sufficient oxygen with the cyanide of potassium to dissolve the gold. In most gold ores these metals are absent, and then the question of selection does not arise, and solutions of cyanide of any strength may be used, but diluted ones would be most convenient, as they supply the necessary oxygen and consume less cyanide. It is to be supposed that sulphates or other cyanicide compounds are removed or decomposed by a preliminary treatment.

In practice it must necessarily happen that solutions containing more than the theoretical quantity of cyanide to the quantity of oxygen present must be used, even when cyanicides are absent, in consequence of the gold being distributed in granules throughout an immense mass of ore. A granule of gold exhausts the cyanide and oxygen in its immediate neighbourhood, and action then ceases until a fresh supply of both arrives by diffusion from the surrounding solution. The author is not aware that the relative rate of diffusion of oxygen and cyanide in watery solution has been determined, but it must be that 16 of oxygen will diffuse sooner than 260 parts of cyanide of potassium, and therefore an excess of cyanide must be used to compensate for this difference.

---

Digitized by Google

## DISCUSSION.

**The President** said that Mr. Dixon's paper was of a special and technical character, and that gentleman had worked at the subject for many years, and so far back as 1877 read a paper in New South Wales on experiments with cyanide of potassium and the ferro- and ferri-cyanide of potassium in the extraction of gold. In doing so he anticipated most decidedly the MacArthur-Forrest process. He found then that the oxidising action, either of the oxygen in the ore or of the oxygen given out from other sources, was absolutely necessary to get a good solution of the gold, and in the paper before them that evening he dealt the so-called selective action rather a death blow. The author had pointed out very clearly that the solubility of oxygen in water was so great that in the quantity of water required to treat a ton of ore—105 gal. —there would be dissolved oxygen equal to the amount of 62 gr., and those 62 gr. of oxygen would, with the necessary cyanide of potassium, dissolve 1,527 gr. of gold, that is, 3 oz. 3 dwt. 15 gr., and the quantity of cyanogen required was 1,001 gr., so that the solution required for this operation would be very dilute, only containing 0·0047 per cent. of cyanogen. The conclusions the author arrived at from his experiments were, he thought, quite justified; they were that the oxygen present was quite sufficient to account for the so-called selective action so long as it was there in sufficient quantity. When dilute solutions were employed, the action upon the gold proceeded rapidly, and with scarcely any action upon the base metals; but if they took a strong solution, containing little or no oxygen in solution, then the action upon the gold was very slow, and it became more or less an action without oxygen, like that which took place upon the base metal compounds. This so-called selective action was pointed out as far back as 1870. He found that dilute solutions were effective on silver and gold, but that stronger solutions were required to deal with copper, zinc, and iron sulphides. In experiments on silver ore he obtained extractions up to 90 per cent.

**Mr. McDermott** asked whether it was not after all a mere question of phrases. It seemed to him that what was stated to take place was in fact a selective action. As a matter of fact, selective action seemed to be explained by the author and not disproved.

**The President** pointed out that it was not a selective action of cyanide of potassium. It was a fact that a solution of cyanide of potassium coupled with oxygen would effect what cyanide of potassium without oxygen would not.

Digitized by Google

## CONTRIBUTED REMARKS.

**Dr. T. K. Rose.**—Mr. Dixon's paper is very interesting as an attempt to review philosophically some of the chemical problems which have been presented by the cyanide process. If his results cannot be accepted, it was still well worth while to put them forward.

Mr. Dixon's arguments generally appear to be based on the assumption that "selective action," if it exists, must be absolute; that is to say, that one substance must be completely dissolved before some other can be attacked. This assumption has been made before, but it is quite erroneous, as has been pointed out more than once already. If two pieces of metal or other conducting substance of different composition are in contact in a liquid, then the one which has the higher solution pressure (or is electro-positive to the other) in that liquid will be dissolved and will protect the other from being dissolved. Thus a piece of zinc in contact with a piece of gold will prevent the latter from being dissolved by cyanide solutions, but if they lie side by side without touching, both will be dissolved, each at the same rate as if the other were not present. Thus, such statements as the following (made by Mr. Dixon on p. 89) are very misleading: "In these circumstances the gold is first dissolved as long as free oxygen is available, and then, oxygen being exhausted, base metals pass into solution."

As a matter of fact, the base metals (present as compounds) would be passing into solution all the time, the rate of dissolution increasing with the concentration of the solution, but having no connection with the presence of gold. This rate is certainly not increased by the absence of oxygen. Since gold cannot expel potassium (or sodium) from KCy or NaCy, and some other substance, such as oxygen or bromine, must be present to assist in the removal of the potassium in order that gold may be dissolved, it follows that when such substances are present in large quantities the dissolution of gold is most rapid. Under these favourable conditions gold is dissolved very quickly, even if the cyanide solution is so dilute that its action on the compounds of the base metals is slow. It is this state of things that is known as "selective action," a convenient term to express the facts. In more concentrated solutions the action on base metal compounds being much more rapid, and that on gold being, under some conditions, slower than before, it results that selective action in favour of gold is less marked, and may even, from a practical point of view, be regarded

Digitized by Google

as reversed. Mr. Dixon's suggestions on p. 89 appear therefore to be based on misconceptions.

A similar error appears in the remarks on "cyanides." It is there stated that "compounds of these (zinc and copper) are only dissolved in absence of sufficient oxygen with the cyanide of potassium to dissolve the gold." A simple experiment would prove the contrary.

With regard to cyanicides, the word may not be pretty, but it is useful to practical men, and any such limitation as that proposed by Mr. Dixon would be inconvenient. To the practical man it is of no importance whether the cyanogen group CN is destroyed (i.e., converted into carbonates, &c.) or made to enter into combinations which are not useful in dissolving gold. Potassium ferrocyanide, for example, has a solvent action too slow to be useful in practice, and any cyanide converted into this substance is destroyed to all intents and purposes. Regeneration of cyanides which have been "put to sleep" is seldom attempted, and need scarcely be considered.

It may be worth noting that Mr. Dixon's estimate of the average amount of water required to saturate a ton of ore is somewhat high. The amount actually needed on dry ore varies from about 30 to somewhat over 50 per cent., or, say, 60 to 100 gallons per short ton (67 to 112 gallons per long ton). The average on unroasted ore would be well under 100 gallons.

Digitized by Google

# THIRD ORDINARY MEETING, 15th December, 1897.

Mr. JAMES MACTEAR *(President)* in the Chair.

---

THE Minutes of the previous meeting having been read, and confirmed,

The following paper was read.

## "Mining on the Black Reef, Witwatersrand Goldfields, South Africa."

By WILLIAM FISCHER WILKINSON, Assoc. Inst. M.M.

OF all the auriferous conglomerate beds of the Transvaal there is none in which the gold is so unevenly distributed, and which has given more disappointment to mining enterprise, than that known as the Black Reef. It is generally believed to derive its name either from its appearance at the outcrop, where the oxidised pyrites gives it a dark appearance, or from a band of hæmatite occurring in some places along the footwall; but whatever the reason was, it is certainly very appropriately named on account of its treacherous character as a gold-bearing deposit.

The outcrop of the reef runs in a well defined line, more or less parallel with and about 7 miles south of the Main Reef series, for a distance of some 40 miles, from south of Boksburg to the east, to south of Randfontein to the west. Beyond these points the outcrop of the reef is less clearly defined, but the formation is traceable for a long distance on each side.

It is the youngest of the famous Transvaal banket beds, and lies unconformably to the older Witwatersrand formation; to the west and south of Krugersdorp this unconformity is clearly

Digitized by Google

marked, the Black Reef formation lying horizontally on the tilted rocks of the older formation. To the south of Johannesburg, and within the limits of Boksburg on the east and Randfontein on the west, the Black Reef is separated from the Main Reef formation by a thick belt of igneous rock, classed as diabase or dolerite, and it is directly on this rock that for a considerable distance the reef lies.

The section (Fig. 1) taken north and south through the Orion Mine by Mr. W. H. Penning, will show the sequence of strata. The reef lies very flat. Due south of Johannesburg its dip is about 14°, and at Natal Spruit to the east it is only 5° on an average, where, owing to the flatness of the reef, the mine workings resemble those of a coal rather than of a gold mine. It is on account of the uneven distribution of gold that the results of mining on this reef have been on the whole unsuccessful, for the rich patches are unfortunately only found here and there at or near the outcrop alone, and at considerable distances apart.

In the early days of mining on these fields, the peculiar feature of this reef of being auriferous in certain ore chutes, appears not to have been properly understood, accounting for a large useless expenditure on properties on either side of, and to the dip of, proved mines.

It has been pointed out* that these rich chutes occur only where there is a radical change in the direction of the strike of the reef. Whether this is a coincidence only it is difficult to say, but it is certainly a fact that the two richest chutes of the Black Reef, namely, the Midas and the Orion, are so situated.

It is with the workings on the latter ore chute that the author is most familiar, and the information given below as to the occurrence of the ore and the method of mining, is based principally on his experience on this portion of the Black Reef. (See Fig. 8).

The extent of the ore chute is at the Orion well defined, and has an easterly and westerly strike, with an average width of 200 ft. On the western boundary of the Orion property the outcrop of the reef takes a sudden bend to the south, and the ore chute terminates at this point. To the east the ore chute runs right across the Orion ground, and passes under the railway into the Minerva property, and from there into the Meyer and Leeb Company's ground. The richest portion of the ore chute has been about the centre of the area described, the reef becoming gradually poorer to the east and west.

* G. A. Denny, *South African Mining Journal*, May 22, 1897.

Digitized by Google

The reef is exploited by small shafts between 60 and 70 ft. deep, which have been put down on an east and west line at a distance of about 500 ft. apart. These shafts are connected by drives under ground, and north and south drives have determined the limits of the ore chute in those directions (Figs. 2, 3, 4). The reef has an average thickness of about 3 ft., but varies very much in different parts of the mine (Figs. 5 and 6). To the north of the ore chute it thins out to nothing, while in places to the centre of the chute it has been found up to 12 ft. thick.

The reef lies on the diabase, and is overlaid by quartzite, which proves an excellent roof, and allows of nearly the whole of the reef, with the exception of a few pillars, being removed. Between the reef proper and the quartzite roof there is usually a seam of quartzite which comes down with the reef, and which is sorted out and left in the mine. The underlying rock does not form an even surface, but is undulating, a feature which causes inconvenience to tramming and drainage operations.

The conglomerate is composed of white quartz pebbles with occasional black and rose-coloured cherty pebbles, cemented together by iron pyrites. The average size of the pebbles is about $\frac{1}{2}$ to 1 in. in diameter. The red pebbles are a favourable sign of the richness of the reef.

It has been noticed that the colour of the iron pyrites is also a guide to the value of the reef, very light coloured pyrites being considered a bad sign, while, on the other hand, the occurrence of dark globular pyrites is a sure sign that the ore is rich. The globular pyrites ($\frac{1}{10}$ in. in diameter) is a peculiar feature of the ore.

Whether these small pebbles of pyrites have been formed by mechanical agency or are the result of metamorphosis is a matter of controversy, but it seems most probable that the latter theory is the correct one.* Another favourable indication of gold is the presence of a soft clay seam underneath the reef. Until quite recently, unless this soft seam was met with, the reef was never considered of much value. On the Minerva property, however, it has been proved that this belief is not always correct, the reef having been found rich where it lay so firmly cemented to the diabase that pieces of the underlying rock would be broken off with the reef. As a general rule, the lower part of the reef is the gold carrier, especially the soft seam on the footwall of the reef.

* Mr. L. de Launay has discussed this question at some length in his paper, "Geological Description of the Gold Mines of the Transvaal" (*Trans. Fed. Inst. M. E.*, June, 1896).

Digitized by Google

This is not, however, universally the case, as good assays are often obtained from the upper portion; consequently it is never safe to send only the lower portion to the mill.

The uneven tenour of the reef has already been referred to. So great is the variation in the value of the reef within short distances, as shown by assays, that it is next to impossible to make a valuation of the ore reserves with any degree of precision, and only the limits of the ore chute can be fairly well defined.

As an example of the unequal value and thickness of the reef, the following table (A), giving some assays taken along the faces of two stopes in the Minerva Mine, is given. The first five samples were taken at about 30 ft. apart, but similar divergent results are also obtained when the samples are taken at a few feet apart.

Table A.—*Table showing Assays and Thickness of Black Reef in two Stopes of the Minerva Mine.*

| Thickness of conglomerate. | | Assay dwt. Fine gold per ton (2,000 lb.). | Thickness of quartzite at top of reef. | | Total thickness of reef mined = height of stope. | |
|---|---|---|---|---|---|---|
| *East Stope*:— | | | | | | |
| ft. | in. | dwt. | ft. | in. | ft. | in. |
| 2 | 1 | 26 | 1 | 2 | 3 | 3 |
| 1 | 9 | 3 | 1 | 4 | 5 | 0 |
| 2 | 6 | 2 | 1 | 6 | 4 | 0 |
| 2 | 7 | 4 | 2 | 8 | 5 | 3 |
| 2 | 0 | 83 | 1 | 9 | 3 | 9 |
| *West Stope*:— | | | | | | |
| 4 | 6 | 57 | 1 | 0 | 5 | 6 |
| 3 | 0 | 1 | 1 | 0 | 4 | 0 |
| 2 | 0 | 2 | 2 | 4 | 4 | 4 |

The most satisfactory method of sampling the stopes is by panning; the results obtained in this way showing what ore should be taken and what left.

The milling results over long periods offer, of course, the best data of the value of the reef, and, as a guide to the yield from this section of the Black Reef, the following table (B) has been prepared from the published returns, some of which are taken from Goldmann's statistical work on the Rand and some from the mining companies' own reports.



Digitized by Google

Table B.—*Table showing the Yield of Black Reef Mines, Natal Spruit, up to June*, 1897.

| Name. | Tons. | Value of gold won. | Fine gold per ton recovered. | Remarks. |
|---|---|---|---|---|
| | | £ | dwt. | |
| Cornucopia..... | 11,460 | 8,052 | 3·3 | Plates only. |
| Golden Kopje ... | 19,152 | 25,300 | 6·2 | ,, |
| Orion, 1892–94 .. | 113,459 | 208,580 | 8·7 | Plates and cyanide. |
| ,, 1895..... | 55,185 | 100,635 | 9·16 | ,, ,, |
| ,, 1896..... | 12,211 | 14,303 | 5·5 | ,, ,, |
| Minerva, 1895 ... | 6,153 | 6,972 | 5·3 | ,, ,, |
| ,, 1896... | 27,673 | 25,828 | 4·4 | ,, ,, |
| ,, 1897 ... | 23,881 | 15,387 | 3·0 | ,, ,, |
| Meyer & Leeb ... | 70,154 | 78,651 | 5·0 | Plates only. |
| East Orion..... | 27,302 | 28,802 | 5·0 | Plates and cyanide. |
| | 366,630 | 512,510 | 6·6 | |

In the above table the average value in fine pennyweights per ton has been calculated by dividing the gross value recovered by 84*s*. to bring to fine ounces,* and dividing this figure by the tons milled.

The figures show that when large quantities are taken, a fair average value of the Black Reef may be obtained, although, as pointed out above, the extreme patchiness of the reef makes the valuation of small areas very uncertain.

It may here be remarked that there is always a good deal of confusion as to the value of the yield of Rand mines, as the system of making returns in fine gold has not been adopted—at least not universally. The published returns are nearly always given in bullion ounces, and, as the cyanide and plate bullion ounces are lumped together in the totals, it is impossible to calculate the value of the yield without knowing their respective fineness.

If the bullion was all reduced to fine ounces the yield and value per ton milled, which is the basis of all cost sheets, would be known with certainty, and, as the fine gold has a fixed value, the returns could be put into pounds, shillings, and pence without

* Eighty-four shillings per fine ounce is probably too high, a more accurate valuation being perhaps 83*s*. The Transvaal bullion is usually sold through the banks to London refiners, and the fine ounce of mill bullion realises more than that of cyanide bullion, which is baser and more difficult to refine.

Digitized by Google

difficulty or error. The comparative value of the ore crushed in different mines would also be accurately known.

The system* of reporting the yield on the Rand is misleading, and, further, confusion is caused by the cyanide yield being often given in the reports per ton treated, instead of per ton milled.

As the ton treated represents the ton milled minus the slimes, the sum of the yield of the ton milled and the ton cyanided will, of course, be an incorrect statement of the total yield.

The author has adopted the accompanying form (Table C) for keeping a record of the yield and the losses which, together, give the value of the ore. The headings are entered from left to right so that the monthly results can be compared at a glance. The example given shows a month's run at the Minerva Mine. The extraction is low as the ore is low grade, the tailings after cyanide treatment seldom being reducible below 1 dwt. 4 gr. per ton whether the ore is rich or poor.

The treatment of the ore is the same as practised on the Rand, namely, amalgamation followed by the cyanide process. The ore is first passed through stone crushers, and then through

* A monthly return of the Ferreira Mine as given by the Chamber of Mines will illustrate this point:—

| April, 1896. | Tons. | Bullion. | Value. | Yield per ton milled. |
|---|---|---|---|---|
| | | oz. | £ | dwt. s. d. |
| Tons milled..... | 9,212 | 8,210·5 | 28,736 | 17·83 = 62 4 |
| Tons treated..... | 6,544 | 2,609·0 | 7,827 | 7·97 = 23 11 |
| | | | | (5·66 per ton milled.) |
| | | 10,819·5 | 36,563 | |

Here the yield per ton milled and per ton cyanided are separately given. The total yield per ton milled will be 17·83 dwt. + 5·66 dwt. = 23·49 dwt., value 79*s.* 3*d.* The bullion ounces being made up of mill and cyanide bullion will, of course, have no standard value, and will vary month by month.

If the return were made out in fine ounces it would be as follows:—

| April, 1896. | Tons. | Fine ounces. | Value. | Yield per ton milled. |
|---|---|---|---|---|
| | | | £ | dwt. s. d. |
| Mill..... | 9,212 | 6,842 | 28,736 | 14·85 = 62 4 |
| Cyanide..... | [6,544] | 1,863 | 7,827 | 4·04 = 16 11 |
| | 9,212 | 8,705 | 36,563 | 18·89 = 79 3 |



Digitized by Google

a stamp battery. The pulp from the plates passes either to settling pits or to tanks, whence the slimes are drawn off and stored for treatment at some future date. The sands are treated by the ordinary cyanide process.

As before stated, the percentage of pyrites in the ore is very heavy, averaging perhaps 20 per cent., in places as much as 50 per cent., and far in excess of what it is in the Main Reef ore. The sulphur has not at present any commercial value, but it is possible that some day the ore may be wanted by sulphuric acid makers.

As regards the specific gravity of the Black Reef ores, some interesting experiments have been made by Mr. Franklin White, M. Inst. M.M., and the following table (D) is compiled from an article published in the *South African Mining Journal*, July 31, 1897.

Table D.

| Samples. | | Specific gravity. | Weight per cub. ft. | Cub. ft. to 1 ton (2,000 lb.). |
|---|---|---|---|---|
| Quartzite (some pyrites) .. | Black Reef .. | 2·677 | 167·044 | 11·97 |
| Ordinary pyritic ..... | „ „ .. | 2·808 | 175·219 | 11·41 |
| Good „ ..... | Eastleigh .. | 3·054 | 190·569 | 10·44 |
| Very „ ..... | Orion ..... | 3·473 | 216·715 | 9·22 |
| Extra „ ..... | „ ..... | 4·045 | 252·308 | 7·92 |
| Average of 17 mines, Main Reef..... | .. | 2·701 | 168·556 | 11·86 |

Turning now to the cost of working, it is necessary to point out first that, owing to the shallow depth of the reefs, these mines have an advantage over the Main Reef mines. On the other hand, the highly pyritic character of the ore is against a good gold extraction, and makes the cost of cyaniding higher.

In making comparisons with foreign mines, it must be remembered that in the Transvaal both labour and supplies of all sorts are very expensive.

White men are employed as rock drillers, overseers underground, carpenters, smiths, amalgamators, cyanide hands, engine drivers, &c. Hand drilling, tramming, sorting, and general work is done by natives.

The average native pay is 65*s.* per month* (exclusive of food,

* In July, 1897, native wages were reduced, and the average may be taken as 50*s.* for thirty days' work.

Digitized by Google

another 15*s.* per month), and the average white pay is £23 per month. The superior officials receive correspondingly higher salaries. Coal costs about 18*s.* 6*d.* per ton, blasting gelatine 2*s.* 2*d.* per lb., and cyanide 11*d.* to 1*s.* 2*d.* per lb.

To show the proportion of the chief items of expenditure in working a Black Reef mine, the following tables (E and F), being a six months' run, January to June, 1897, of the Minerva Company, are given. The figures are exclusive of development and head office expenses, a reasonable allowance for which would be 3*s.* per ton for development and 1*s.* 6*d.* for office expenses; depreciation of plant would also have to be taken into account.

Table E.

| | Percentage of cost. | Cost per ton on 23,881 tons. |
|---|---|---|
| | | *s.* *d.* |
| White labour | 25·2 | 3 2·57 |
| Native labour | 30·2 | 3 10·63 |
| Coal | 9·9 | 1 3·29 |
| Explosives | 4·8 | 0 7·45 |
| Cyanide | 8·5 | 1 1·19 |
| Boys' food | 4·6 | 0 7·07 |
| Sundries | 16·8 | 2 1·98 |
| | 100·0 | 12 10·18 |

The following table shows the same expenditure subdivided according to departments:—

Table F.

| | *s.* | *d.* |
|---|---|---|
| Stoping | 5 | 3·89 |
| Hauling and tramming | 1 | 1·05 |
| Milling | 3 | 9·24 |
| Cyanide | 2 | 8·00 |
| | 12 | 10·18 |

The high cost of milling needs some comment.

The mill is an old one, and the ore bins and crushers are badly arranged, necessitating more handling of the ore than should be necessary. The crushers themselves were much worn, and gave a lot of trouble. The cost of shoes and dies is heavy, on account of the acidity of the ore; also it must be mentioned that, on account

Digitized by Google

of labour difficulties, the mill only ran three-quarters of its full running time.

Two other ore chutes on the Black Reef are worked: namely at the Midas, and at the Eastleigh Mine, Klerksdorp district. The latter mine is some hundred or so miles west of the district described above, and the correlation is not quite certain, but the reef has the same characteristics as at the Orion Mine.

The Eastleigh production has been:—

| | Tons. | Value of yield. £ | Value per ton. Dwt. fine gold. |
|---|---|---|---|
| 1895..... | 49,055 | 73,558 | 7·1 |
| 1896..... | 50,991 | 75,146 | 7·0 |

At the Midas very different conditions prevail; the reef here also lies on diabase, but is much faulted. It is overlaid by quartzite and shale beds, the latter being absent at the Orion. The reef varies very much in thickness and the quartzite bed often disappears, leaving a bad roof of shale, which requires timber, making the cost of mining heavy. The workings are shallow and the ore is free milling, the heavy pyrites, so characteristic of the Black Reef, being absent. The reef is, on the whole, thin, irregular in value, but in parts very rich. A peculiar feature here is that gold is found in the country rock on both sides of the reef, sometimes up to a foot or two. Fig. 7 shows a section of the reef where it is rich. As regards the precise limits of the ore chute, the author has no information. The mine is equipped with a 20-stamp mill and cyanide works, and the crushings during 1895 and 1896 have been:—

*New Midas Production.*

| | Tons. | Value. £ | Value in dwt. fine gold per ton. |
|---|---|---|---|
| 1895..... | 959 | 5,869 | 29·0 |
| 1896..... | 19,083 | 37,190 | 9·2 |

As the treatment of the tailings by the cyanide process may be of interest, the author adds some notes kindly supplied by Mr. William Penman, cyanide manager to the Minerva Gold Mining Company.

Digitized by Google

*Notes on the Extraction of Gold by Cyanide from Minerva tailings.*

*Consumption of Cyanide.*—Owing to the large quantity of copper in the ore it has been found necessary to use stronger solutions than on the Main Reef.

For example, on an 11 dwt. 2 gr. sample, by using 0·5 per cent. solutions, an extraction of 10 dwt. 5 gr. was obtained, and with 0·3 per cent. solutions an extraction of 9 dwt. 8 gr.; in the first instance the consumption of cyanide was 3·8 lb. per ton, in the second 2·75 lb. Thus, though in the first experiment there is a higher consumption of cyanide, it is more than counterbalanced by the gain in gold.

*Acidity.*—When the pulp comes freshly crushed from the battery there is no difficulty from this cause. When the tailings have been allowed to stand any length of time owing to the very pyritic nature of the ore, such large quantities of free sulphuric acid and sulphate of iron are formed that it is almost impossible to treat the ore in the ordinary plant, consequently if one were to treat old Black Reef tailings, it would be necessary to put up a special plant for washing and neutralizing before treating.

*Precipitation.*—With the solutions used this has not been a difficulty. The copper precipitates first on the zinc, the gold precipitates on the copper equally as well as on fresh zinc but more slowly.

Table G.—*Table showing Treatment of very Pyritic Tailings of Black Reef Ore, Minerva Gold Mine, Transvaal.*

| | Assay before treatment. | | Assay after treatment. | | Consumption of KCN. | Time required. | Percentage extraction. |
|---|---|---|---|---|---|---|---|
| | dwt. | gr. | dwt. | gr. | lb. | days. | per cent. |
| *a* .... | 11 | 2 | 0 | 21 | 3·8 | 6 | 92·1 |
| *b* .... | 11 | 2 | 1 | 18 | 2·76 | 6 | 84·2 |
| *c* .... | 3 | 12 | 1 | 18 | 2·8 | 6 | 50·0 |

Digitized by Google

| | Strength. | Time standing. | Strength after. | Consumption of KCN. |
|---|---|---|---|---|
| | per cent. | hours | per cent. | per cent. |
| 1st weak wash, *a* ..... | 0·2 | nil | nil | 0·04 |
| „ „ *b* ..... | 0·2 | „ | „ | 0·04 |
| „ „ *c* ..... | 0·1 | „ | „ | 0·02 |
| 1st strong solution, *a* ..... | 0·5 | 18 | 0·04 | 0·092 |
| „ „ *b* ..... | 0·3 | 18 | 0·02 | 0·056 |
| „ „ *c* ..... | 0·3 | 18 | 0·02 | 0·056 |
| 2nd strong solution, *a* ..... | 0·5 | 18 | 0·26 | 0·048 |
| „ „ *b* ..... | 0·3 | 18 | 0·14 | 0·032 |
| „ „ *c* ..... | 0·3 | 18 | 0·09 | 0·048 |
| 3rd strong solution, *a* ..... | 0·5 | 18 | 0·45 | 0·01 |
| „ „ *b* ..... | 0·3 | 18 | 0·28 | 0·004 |
| „ „ *c* ..... | 0·3 | 18 | 0·15 | 0·03 |
| Weak wash, *a* ..... | 0·2 | nil | 0·4 | gain 0·04 |
| „ *b* ..... | 0·2 | „ | 0·22 | gain 0·004 |
| „ *c* ..... | 0·1 | „ | 0·1 | nil |
| Weak wash, *a* ..... | 0·2 | nil | 0·2 | nil |
| „ *b* ..... | 0·2 | „ | 0·17 | 0·006 |
| „ *c* ..... | 0·1 | „ | 0·08 | 0·004 |

In conclusion the author must express his thanks to Mr. Humphrey Hayes, general manager of the Minerva Mine, and to Mr. E. H. A. Cohen, general manager of the New Midas Mine, for their courtesy in assisting him in collecting information for this paper.

## DISCUSSION.

**Mr. Rickard** did not agree with the author when he stated that attempts to follow the reef underneath the limestone formation were useless. He considered that there still remained a great deal to be done before it could be said that the reef had been thoroughly tested. This reef was extremely patchy, but the patches that had been worked at the Orion and the Midas were by no means contemptible. It appeared to him that the important question with regard to the explorations to such a reef, was whether it would not be much better to keep to the "quick" of

Digitized by Google

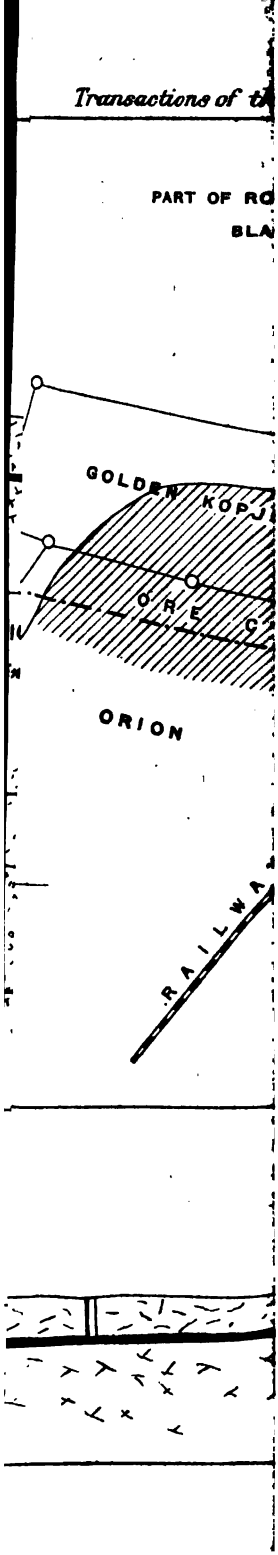


Digitized by Google

Digitized by Google

the reef, and follow it in a sinuous course in such a way as to give the best chance of reaching other patches, or areas of ore. That was a method, however, which did not seem to have been followed on the Rand. He pointed out that almost all attempts to discover new ground, had been by means of boring, but, while boring was a very effectual means of testing reefs like those of the Rand proper, it was very inconclusive for reefs such as were described by the author. The reef itself was most interesting, as it was found at the summit of the great quartzite series of the Rand, and at the base of a remarkable chert-limestone formation, and it formed a kind of datum line by which geologists could determine their position in the geological scale. He would like to have asked the author about the presence of chert in the reef filling itself; seeing that there was no chert limestone underneath the reef, it seemed remarkable that there should be chert in the reef—in fact, it seemed to prove that there was an underlying formation of limestone with chert, for the chert could not have come from the subsequently deposited rocks. As to the statement of cost, the author simply gave that of stoping out the ore, and did not take into account the cost of developing the mine. With regard to the acidity of the ore, he suggested that it could be overcome by using lime; if that were done there should be no difficulty in that respect.

**Professor Huntington** remarked that the price of cyanide seemed to be put at rather a high figure, viz., 11*d.* to 1*s.* 2*d.* He also observed that the author used the term "free sulphuric acid"; he considered that it was rather a misleading expression, as the sulphuric acid could hardly be "free."

**The President** remarked that that was the price on the Rand, and stated that he understood there was a heavy duty.

**Professor Huntington** thought that the price would not vary more than 1½*d.* at the outside, and he had never heard of there being a duty.

**Mr. H. G. V. Adler** said that he understood that the Black Reef had been traced, and parts of it worked, and with the exception of one or two portions it had not been worked at a profit. The particular chutes which the author had written about, had been worked, and the whole reef traced as far as the "Midas," without any portion of it proving profitable. At the "Midas" there was a rich chute, but to the east and west of that property the ground contained scarcely any gold at all. With regard to Mr. Wilkinson's remarks as to milling and cyaniding, he did not think with the present system of working on the Rand returns

Digitized by Google

could be made out in the manner suggested, as the tailings were often left for a month or two before being treated, and thus the actual monthly returns was in respect of comparatively old tailings.

**Mr. McClelland Henderson** pointed out that the author stated that the published returns were nearly always given in bullion ounces; as a matter of fact, in most cases the equivalent in standard gold was given in a special column opposite to the columns giving the output in bullion ounces. This fact, therefore, pointed to the paper being written at a rather distant date.

**The President** concurred, but stated that it was only recently that the arrangement had come into force.

**Mr. Claudet** said with regard to the statement, that the colour of the iron pyrites was a guide as to the value of the reef, light coloured pyrites being considered a bad sign, and the occurrence of dark globular pyrites a sure sign that the ore was rich, he thought it would have been interesting to have had figures giving an analysis of those two particular pyrites. It might be possible that they were of a different character altogether, and that the difference was not merely due to the partial oxidising of one of them. He thought that the author did good service in bringing forward the matter of reporting values in fine gold, and considered that all companies ought to give their returns in fine gold. Fine gold is gold 1000 fine, and returns should be calculated on that basis. Standard gold is 916·6 fine. What was wanted, was a basis of comparison in order to compare the yield of all mines, and there was a good deal to be done in that direction by the Transvaal companies and others. Assays of the ore were always reported in terms of fine gold, and if the mill yield was calculated in another way, it produced a confusion of ideas. With regard to dividing out values by 84*s*., and taking the result as fine gold, such a method might be close enough, but, as a matter of fact, the value of fine gold was close on 85*s*. per ounce. The great feature of the ore appeared to be the immense amount of pyrites which it contained, and under such circumstances, they could understand that the loss of gold would be very considerable. In such a state of things he thought it might be useful to reverse the process, viz., to concentrate first and afterwards cyanide. It might be that the concentrates contained practically the whole value of the ore, and he would be glad to hear if the value was really in the concentrates, or in the other part of the ore.

**Mr. Adler** stated that at the Meyer and Lieb Mine it was four years before a cyanide plant was erected, and the results were

Digitized by Google

5½ to 6 dwt. over the plates only, so that a good deal of gold was recoverable by the plates. He did not think, however, that any of the mines on the Black Reef had tried any system of concentrating.

**The President** said with regard to the figures given of the production at the New Midas, in the years 1895 and 1896, he was greatly struck by the variation in the yield, it being 29 dwt. in 1895 and 9·2 dwt. in 1896. He considered that that clearly indicated the exceedingly patchy character of the ground, and almost pointed to the fact that if the poorer ground were followed it might lead to richer patches. If the author's statement that the deposits must have been laid down horizontally was correct, it seemed to him that although the layer, at one time, might be poor, at another time it might be rich without any chute of gold leading into it. He was of opinion that Table B could only be taken as a comparative table, owing to the yield having been arrived at by taking the value of the gold and dividing it by an arbitrary figure. The table, however, clearly showed that the yield from many of the mines was exceedingly small, and if the cost was as much as the author stated, little margin for profit was left. With regard to the table dealing with the treatment of ores, it would have been more satisfactory if the author had stated whether the figures simply represented experimental results, or working on a large scale. It appeared to him that in the first part of the table the figures represented working on a large scale, but in the latter portion they seemed to point to small experiments. If such were the case the figures were open to objection (as were all similar experiments) in regard to the consumption of cyanide, and were, therefore, only a very general guide.

A short communication entitled: "Notes on Smelting at Broken Hill," by HENRY WATSON, Assoc. Inst. M.M., was next read.

This was followed by the reading of

Digitized by Google

## "Notes on the Buying and Sampling of Ores, and the Working of Mines on the Tribute System, in Chili."

By GERALD V. HOPKINS, Assoc. Inst. M.M.

THE ores are collected by agencies of the amalgamation and smelting works in every mining district of importance.

The legal system of weights and measures is the metric. The miner, being very conservative, invariably uses Spanish.

The following table gives the terms used to express the value of ores :—

| Cajon. | Quintal. | Libra. | Marco. | Onza. | Castellano. | Kilos. | Grms. |
|---|---|---|---|---|---|---|---|
| 1 | 64 | 6,400 | 12,800 | 102,400 | 640,000 = | 2,944 | — |
| | 1 | 100 | 200 | 1,600 | 10,000 = | 46 | — |
| | | 1 | 2 | 16 | 100 = | — | 460·0 |
| | | | 1 | 8 | 50 = | — | 230·0 |
| | | | | 1 | 6·25 = | — | 28·75 |
| | | | | | 1 = | — | 4·60 |

Silver = Diez-Milesimo, Marco por Cajon.

Gold = Cien-Milesimo, Onza por Cajon, Castellano por Cajon.

Lead, copper, iron, &c., in percentage.

Diez-Milesimo = one ten-thousandth part, or 0·001 grm. of metal in 10 grm. of ore.

Cien-Milesimo = one hundred-thousandth part, or 0·0001 grm. of metal in 10 grms. of ore.

Marco por Cajon = 230 grms. of metal in 2,944 kilos. of ore.

Onza por Cajon = 28·75 grms. of metal in 2,944 kilos. of ore.

Castellano por Cajon = 4·6 grms. of metal in 2,944 kilos. of ore.

In Bolivia the cajon contains 50 quintals, therefore marco por cajon equals 230 grams of metal in 2,300 kilos. of ore.

As compared to the English system of ounces per ton :—

Digitized by Google

| | Oz. per ton. |
|---|---|
| Diez-Milesimo | 3·2666 |
| Cien-Milesimo | 0·3266 |
| Marco por Cajon | 2·5515 |
| Onza por Cajon | 0·3189 |
| Castellano por Cajon | 0·0510 |
| Marco por Cajon (Bolivian) | 3·2666 |

The basis on which silver is bought is the fortnightly quotation in Valparaiso, which is calculated as follows, taking exchange at 18 pence silver in London at 30 pence per ounce (any fraction of a penny being struck off), the amount of fine silver in the standard ounce is approximately a Spanish onza, as the marco contains 8 onzas: the value of the marco is 30 × 8 = 240 pence less calculated expenses (freight, insurance, &c., to London 2·3 per cent.) 5·5 pence = 234·5 pence, divided by exchange 18 pence = 13 dols. 3 cents per marco.

The printed scale generally used is based on the value of the marco at 10 dols. 33 cents. The difference between this and the actual value of silver per marco is paid as a premium termed "extra sobre precio."

The percentage of this difference paid varies according to the class of ore and its richness, more or less, as follows:—

| | | | | | |
|---|---|---|---|---|---|
| Ore averaging from | 10 | to | 20 | d.m.... | 30 per cent. |
| „ | 20 | „ | 30 | „ ... | 40 „ |
| „ | 30 | „ | 40 | „ ... | 50 „ |
| „ | 40 | „ | 50 | „ ... | 60 „ |
| „ | 50 | „ | 80 | „ ... | 75 „ |
| „ | 80 | „ | 100 | „ ... | 85 „ |
| „ | sup | „ | 100 | „ ... | 95 „ |

The Cia de Fundicion y Beneficiadora, with which the writer was connected for several years, bought ores at Antofagasta, and at the agencies in the mining districts of Caracoles, Sierra Gorda, Tongoy, Vallenar, Serena, Illapel, San Felipe, &c. The mode of sampling was in every case the same, so only a description of the process carried out at Caracoles need be given. The mining district of Caracoles is situated in the Province of Antofagasta, on the western slope of the Cordillera, some 140 miles direct inland to the N.E. of Antofagasta, at an elevation of 10,000 ft. Its nearest railway station, distant some 30 miles, is Sierra Gorda, on the Antofagasta and Bolivian line, at kilometres 170. The atmosphere is so dry that any iron, such as a knife left out for an indefinite time, never oxidised, remaining as bright as when originally

Digitized by Google

exposed. The district consists of the following groups clustering round the village of Placilla:—

Casa Tabla, 3 miles to the N.W.; Bella Vista, 3 to 4 miles to the N.; Explotadora and Descubridora, 1 mile to the E.; Resurreccion and Recuerdo, half way between the last-named group and the village of Placilla, Perseverancia, Constancia, and Sud America group, to the S. La Isla to the W. 6 miles, and adjoining it San Juan. The mines in these groups are situated on the hill sides, and only connected with the two centres of the Placilla and Isla by mule tracks. The few mines situated on the plains have, however, proved worthless.

From the discovery in 1871 to well into the eighties the production was considerable, and of a high average; but of recent years these districts have been, comparatively speaking, poor.

The mines seem to have been surface pockets of rich, decomposed ore, which in depths change to antimonial-arsenical combinations. The pockets were often connected with veins, which were invariably poorer. The mines occur where sandstone and porphyry intersect. There is little deep work, with the exception of the Deseada, with a depth of 2,040 ft.

Three or four of the principal mines possess steam-hoisting machinery and steam-crushing plant; the majority, however, are dependent on the "whim" (malacate), working to the depth of 500 ft., the crushing being done by horse-power or hand.

As the mines do not allow of direct profitable working, they are now entirely given over to the working miner (pirquinero) on the tribute system (pirquin).

A mine worked on this system is thrown open, and the miner is at liberty to enter and examine it. As soon as he has selected the location where he desires to work he arranges with the representative of the mines the terms. These terms (derechos) vary considerably, owing to the different conditions the mines are worked on. A few provide the horses for the whim, crushing machinery, &c. Some insist on the miner (pirquinero) bringing to the surface the barren rock, others permit him to dump it into the nearest unused working.

The terms (derechos) paid the mine-owners in Caracoles on the average were for ore assaying:—

| | | | | |
|---|---|---|---|---|
| 10 to 20 | d.m., | 15 | per cent. | of net value. |
| 20 „ 30 | „ | 20 | „ | „ |
| 30 „ 50 | „ | 25 | „ | „ |
| above 50 | „ | 30 | „ | „ |

Digitized by Google

Ore received at the Bodega had to be crushed to pass a 1½-in. sieve; the size of the lots varied from 1 kilo to 50 quintals.

The silver ores of this district are native silver, argentite, ruby silver, horn silver, and bromyrite. The Chilian miner classifies silver ore under two headings—"metales calidos" and "metales frios;" again, according to their value, into "pinta" and "dispinta." A mine is divided into 24 parts or barras.

*Metales Calidos* are the haloid compounds and native silver.

*Metales Frios* are the sulphuretted antimonial and arsenical ores of silver.

*Pinta* is ore assaying over 50 d.m.

*Dispinta* is ore assaying under 50 d.m.

In sampling, when using the tolba, the ore is fed into the first hopper, descending which it encounters the conical shaped separator; this divides the stream into four equal parts, three passing out through the wooden shoot; the fourth falls into a receiver, in passing from which it is again divided into four. Each of these separate parts leaves the tolba by distinct shoots; thus, if 96 sacks have been sampled, by taking the product of one shoot the result is six sacks or the $\frac{1}{16}$th part; when, as is often done, the product of two of these shoots is taken instead of one, we obtain 12 sacks or an $\frac{1}{8}$th part.

If the ore to be sampled by the tolba is poor and of a uniform character, the $\frac{1}{16}$th is amply sufficient; but if rich and of uneven character $\frac{1}{8}$th is better. Indeed with ore of this latter class the writer found it pay for the little extra work entailed to use the tolba as a mixing machine, as is done at the mines; the upper shoot is then removed, the aperture closed, the ore descending the hopper is divided into four parts by the conical separator, to reunite in the lower receiver; passing from thence, it is quartered, and received in sacks affixed to the shoots, so as to be ready for sampling. This has always given a very homogeneous bulk, permitting an exact sample being taken.

The process when using the corno is similar; the ore is simply *quartered*.

As soon as the sample is reduced to 25 kilos. it is crushed on the *plancha*, to pass a sieve of four to the inch, then passed through the smaller corno (3 ft. high) once or twice to mix it. It is then sampled. A quarter of the product from the last operation is crushed on the plancha to pass a 20 to the inch sieve. This is again mixed and quartered, recrushed to a 40 to the inch sieve, quartered again in a smaller corno, and finally ground to pass a 90 to the inch sieve. The final product is so adjusted as to weigh

Digitized by Google

50 grams, it being necessary to have an exact weight, as the Chilian ore invariably contains a large proportion of metallics, known in the native parlance as charqueira.

As in the English practice, three lots are required, one for seller, one for buyer, and the third is sealed up as a reference sample. This is kept by the buyers. In case of a difference of more than 1 d.m., it is sent to some recognised assayer, mutually agreed on, whose result is final. The cost of this reference assay is borne by the buyer or seller, according to whose assay differs most widely from the reference assay.

Digitized by Google

# FOURTH ORDINARY MEETING, 19th January, 1898.

Mr. JAMES MACTEAR (*President*) in the Chair.

---

THE Minutes of the previous meeting having been read, and confirmed,

The following paper was read:

## "On the Successful Treatment of Tailings by the Direct Filling Process on the Witwatersrand."

By F. CARDELL PENGILLY, Assoc. Inst. M.M.

FOR several years past metallurgists have tried, but so far with indifferent success, the treatment of tailings by what is known as the direct-filling process. In this process the vat that is filled with tailings from the battery is treated directly by cyanide instead of the contents being discharged into another vat for treatment. In other words the usual "intermediate" or "settling" vats are dispensed with.

There are two mines on the Witwatersraud gold-fields where the successful treatment of tailings by the direct-filling process is now being carried on. These are the Jumpers Gold Mining Company and the New Kleinfontein Company, Limited.

The following pages are devoted to a short description of the plant and method of treatment adopted at the latter mine during the past six months; a method that has been worked with considerable success and given exceedingly good results.

The plant consists of 2 slime separators, 19 treatment vats, 4 extraction boxes, and 9 solution tanks. The slime separators are of the ordinary spitzkasten or pointed box style, 6 ft. square at the top and 6 ft. deep. Of the 19 treatment vats, 13 are of 200 tons capacity and 6 of 130 tons capacity each. Around the top of each vat is a launder, which carries away the overflow into the slimes race. The 9 solution tanks have a total capacity of 636



Digitized by Google

tons of solution, and each is connected with the 3 centrifugal pumps worked from a motor that pumps the weak, medium, or strong solutions on to the treatment vats. The pulp or tailings, after leaving the battery plates, is lifted by means of a tailings wheel into a launder, by which it is conveyed to the slime separators. The slimes from the first separator pass into the second, whereby a quantity of fine sand is saved that otherwise would flow away. About 15 per cent. of slimes are eliminated in the separators, and the remaining pulp is run through launders into the treatment vats, which are previously filled with water. In the course of filling the vat another 10 per cent. of slimes overflows into the slimes race, so that the resulting tailings to be treated in the vat contain but a small proportion of slimes.

The vat is filled with tailings (sand) to within 1 ft. of the top, when the stream is diverted into another vat.

*Method of Treatment.*—Each vat, after being drained of water, is treated with an alkaline solution to neutralise the free acid in the tailings formed by the decomposition of pyritic ores. As soon as the solution draining away is slightly alkaline the treatment by cyanide solution is commenced. Various strengths of solution are pumped into the vat, each vat receiving during its course of treatment from 200 to 275 tons of cyanide solution. The length of treatment is six days, and the amount of cyanide used is 0·6 lb. per ton of tailings.

The table (p. 115) is a page from the log book of the New Kleinfontein Company's cyanide works, which shows the exact method of procedure adopted in the works in the treatment of a vat of tailings.

*Precipitation of Gold in the Extractor Boxes.*—The precipitation of gold from the solution coming from the treatment vats is effected by the means of zinc shavings. A certain portion of the ore coming from the mine is of a rebellious nature, containing sufficient foreign metals to retard, if not prevent, the precipitation of gold by zinc. To counteract the effects of these foreign metals it has been proved efficient in practice on these fields to set up a lead couple, and at these works this is effected by dipping the zinc shavings in a weak solution of acetate of lead preparatory to being placed in the extractor boxes. In all cases it is found that zinc containing from 1 to 2 per cent. of lead gives the most satisfactory precipitation. By the use of acetate of lead a perfect precipitation is brought about; only traces of gold remaining in the solution after passing through the extractor boxes.

The zinc shavings are first placed in the weak solution box and

Digitized by Google

VAT. I. CHARGE I. CAPACITY 207 TONS.

| Date filling. | Time. | Test. | Tons. | KCy solution. |
|---|---|---|---|---|
| October. | | | | |
| Wed. 6th.. | 1 P.M. | .. | Filling | |
| „ .. | 2 A.M. | .. | Filled leaching dry | |
| „ .. | 4 „ | Acid..... | Alkaline wash, 20 lb. NAHO used, ditto ½ bag lime | |
| „ .. | 9 „ | Alkaline.. | Preliminary solution, 0·16; KCy, 20 tons | 20 |
| „ .. | 2 P.M. | .. | 0·01 changed to weak box | |
| „ .. | 2 „ | .. | 1st *strong*, 30 tons 0·3 KCy; 3 P.M., 20 tons; 7 P.M., 6 tons | 56 |
| „ .. | 9 „ | 0·09 | Standing under solution for 3 hours | |
| „ .. | 12 P.M. | .. | Started leaching until 12 noon | |
| Thurs. 7th | 1 A.M. | 0·1 | Changed to medium box, 3 A.M., 1·3; 6 A.M., 1·6; 9 A.M., 0·18 | |
| „ | 12 noon | 0·2 | Changed to strong precipitating box | |
| „ | 12 „ | .. | 2″ *strong*, 30 tons; 0·3 KCy, 3 P.M., 10 tons; 6 P.M., 15 tons; 8 P.M., 1 ton | 56 |
| „ | 8 P.M. | 0·28 | Standing under solution for 3 hours. Started leaching until 8 A.M. | |
| Frid. 8th.. | 8 A.M. | 0·26 | *Medium*, 20 tons; 12 noon, 5 tons; 4 P.M., 8 tons; 8 P.M., 8 tons | 36 |
| „ .. | 9 P.M. | 0·2 | Changed to medium; 12 P.M., 8 tons; 5 A.M., 10 tons; 12 noon, 7 tons | 25 |
| Sat. 9th... | 3 „ | 0·18 | 4 P.M., 10 tons; 8 P.M., 7 tons; 4 A.M.; 12 tons; 8 A.M., 5 tons | 34 |
| Sun. 10th. | 6 „ | 0·14 | *Weak*, 5 tons; 12 P.M., 5 tons; 6 A.M., 5 tons; 12 noon, 5 tons | 20 |
| Mon. 11th | 6 A.M. | 0·1 | Changed over to weak | |
| „ | 6 P.M. | 0·09 | 5 tons; 12 P.M., 5 tons; 7 P.M., 5 tons; 12 P.M., 4 tons | 19 |
| Tues. 12th | 6 A.M. | .. | Leaching dry | |
| Wed. 13th | 6 „ | .. | Discharging | |
| | | | | 266 |

Amount of KCy used, 0·59 lb. per ton.

afterwards transferred to the medium and thence to the strong. In the weak and medium solution precipitating boxes the gold becomes plated on the zinc, and less zinc is destroyed than in the strong. The solution from the extractor boxes, containing only traces of gold, is returned to the solution tanks, where, if found necessary, its strength is made up by the addition of cyanide.

*Clean-up and Reduction of Zinc-Gold Precipitates.*—The zinc is taken from the boxes at the semi-monthly clean up and washed by hand in an oblong wooden box. The washings are then placed on a



Digitized by Google

screen of 700-mesh, when all that will not pass the screen is replaced in the extraction boxes together with the washed zinc. The product that passes the screens consisting of gold in the state of a black slime and fine particles of zinc, is placed in a vat containing a filter bottom consisting of American duck placed over a wooden grating. The space beneath the filter bed is connected with a 2-in. Cameron pump, by means of which the excess of moisture in the slimes is drawn off through the filter bed; the solution thus drawn off being passed into one of the extraction boxes to prevent loss of very fine particles.

The slimes freed from excess of water are taken out and placed in another vat having a capacity of about 5 tons. A 10 per cent. solution of sulphuric acid is gradually added, the whole mass being continuously agitated by means of a mechanical agitator.

The acid dissolves the zinc, and when the solution is accomplished and no more action takes place the vat is filled with water, the agitator being kept stirring all the time. When the vat is full of water the agitator is withdrawn and the slimes allowed to settle for an hour. The water is then decanted off, the slimes taken out, dried, and roasted in a furnace, care being taken that the slimes are not disturbed during the roasting so as to cause any loss.

The dried slimes before acid treatment contain 4 per cent. of gold; after treatment this percentage is increased to 33 or 45 per cent. The average fineness of bullion recovered is 847 gold and 60 silver, the base metals being principally copper and lead.

Of the pulp leaving the mill, 73 per cent. is recovered and treated in the cyanide works, and an actual extraction of 80 per cent. of gold is recovered from this, or 60 per cent. of the gold leaving the plates.

The advantages gained by the use of the "direct-filling process" are numerous, chief of which is the smaller plant required.

There are also two other important points to be considered: Firstly, a good leachable product must be obtained; secondly, the process is suitable for tailings of a low grade, or about 3 dwt. per ton; for tailings containing more gold than this the intermediate, or double treatment, should be adopted.

The cost of erecting eight settling vats of 450 tons capacity each, including foundations, trucks, filter beds, and piping, would be £6,000.

Digitized by Google

| | £ | s. | d. |
|---|---|---|---|
| Interest on £6,000 at 10 per cent. ..... | 600 | 0 | 0 |
| Maintenance of settlers for 12 months, 10 per cent. ..... | 600 | 0 | 0 |
| 2 extra shiftsmen in works at £22 10s. per month ..... | 540 | 0 | 0 |
| Discharging 192,000 tons of tailings at 4d. per ton..... | 3,200 | 0 | 0 |
| | £4,940 | 0 | 0 |

This is equal to a profit of 6d. per ton, or 2 per cent. on the capital of the company, the actual working cost being 1s. 11d. per ton, including general charges and maintenance.

---

## DISCUSSION.

**Mr. MacDermott** said he would have liked to have heard some further details as to the saving in the number of vats, as it appeared to him that although the settling boxes were dispensed with a great number of actual treatment vats were used. Such being the case it was not easy to compare the saving that would be effected by using the process as against the ordinary system generally used in South Africa on similar ores.

**Mr. Arthur L. Pearse** stated that he had recently had a rather difficult experience with regard to percolation; the slimes had given so much trouble that he had had to adopt almost the same methods of elimination as had been described. He had attempted to deal with slimes for over ten years, and it was only quite recently that he had been able to get a good percolation by using a method of elimination almost identical with that described by the author. It was working very satisfactorily at present, and although their loss in bulk was about 25 per cent. they had, as far as extraction was concerned, been able to get their balance sheet on the right side. He drew attention to this because he knew of two or three cases in which difficulties with regard to percolation had been experienced, and thought that they might be put on a paying basis by the method he had adopted.

**Mr. Claudet** said that it seemed to him that the whole point in the paper was not so much the difficulty with the slimes which Mr. Pearse mentioned, but more particularly with getting rid of an expenditure of 6d. per ton by dispensing with the use of

Digitized by Google

settling vats. He was not sure whether he understood the author correctly, but it appeared to him that the paper implied that if the author had had to use settling vats instead of the direct filling method it would have cost him 6*d.* more per ton.

**The President** thought that the author had not made the point very clear.

**Mr. McDermott** remarked that the author evidently referred to avoiding the re-handling of the ores.

**Mr. Claudet** continuing, said that it certainly appeared to him that the whole matter was one of reducing the handling of the ore. They knew that the expenses of handling ore were very great, and the more they were able to reduce the number of operations the better it was; in the case put forward by the author only 6*d.* per ton was saved. He should have liked to have seen figures showing how the system compared with the ordinary method, and setting out how much of the gold the slimes contained in each process. Another point which occurred to him in connection with the paper was the vexed question of lead in the zinc shavings. It was a matter he had never been able to clear up, nor had he been able to find anyone else who could do so. Some of the men on the Rand said that they would rather use zinc containing 1 or 2 per cent. of lead in preference to zinc containing none, as they found that precipitation was aided thereby. He should like to hear the views of other members on the point, as opinions were very much divided. The disadvantage in using impure zinc was that the lead got into the bullion and rendered refining troublesome. They could separate the zinc from the bullion by sulphuric acid treatment, but the lead remained; and it was very difficult to get fine bullion when lead was present, except with a great deal of trouble and loss.

**Mr. J. H. Collins** said that it appeared to him that the author had confounded two entirely different things. It was quite conceivable that a zinc lead couple, obtained by putting thin films of lead on the surface of the zinc, would give one result, and an alloy of zinc and lead would give another. The author spoke as if it would have the same result, but he should think it would be very different.

**The President** thought that the paper, containing as it did an actual statement from a log of the works, was extremely valuable to those who had to deal with such matters. There was no doubt whatever that the results obtained on the Rand by separating the slimes in the manner described had been exceedingly successful. He did not quite follow the author's explanations at the end of the

Digitized by Google

paper with regard to the advantages gained by the use of the direct filling process as compared with the ordinary method. The author stated: "This is equal to a profit of 6*d.* per ton, or 2 per cent. on the capital of the Company, the actual working cost being 1*s.* 11*d.* per ton, including general charges and maintenance." He had been unable to find in the body of the paper any figures to check that calculation, and he thought the matter should be referred to the author to amplify his statements. He had no doubt that the figures were correct, but it was very desirable to give data so that the calculations could be checked.

With regard to the precipitation of the gold in the extractor boxes, he thought, with Mr. Collins, that there was a great difference indeed between having a simple alloy of lead and zinc and having a proper lead zinc couple; the addition of acetate of lead giving a couple in the most perfect form for the decomposition of the gold solution. He had personally tried a very similar process, but using a solution of silver on the zinc and getting a zinc silver couple, which he had found to have very great advantages in starting the precipitation of the gold while it avoided to a large extent the contamination of the bullion with lead. He thought it ought to be noted that the paper referred to the treating of the slimes from the zinc boxes with sulphuric acid. Some few months ago Mr. Claudet gave some interesting figures* relating to the inferior character of the bullion produced from the zinc box precipitates, and stated that using sulphuric acid removed the zinc almost entirely, and, as they could see from the figures given by the author, gave a very much better character of bullion. The dried slimes, to begin with, contained only 4 per cent. of gold, but after milling the bullion recovered was 847 fine.

The following communication was next read.

* *Trans. Inst. M. M.*, vol. iv, p. 254.

Digitized by Google

# "Notes on the action of Cyanogen on Gold."

By James Park, M.Inst.M.M.

At the hearing of the application of the Cassel Gold Extracting Company, Limited, for an amendment to their patent before the Registrar of Patents, at Wellington, in November, 1896, and at the subsequent appeal to the Supreme Court in May, 1897, the action of an aqueous solution of cyanogen gas on gold proved an interesting and, as after events proved, an important point of dispute between the contending parties.*

Immediately prior to the hearing of the application for amendment, the author, as a technical witness for the Crown, was requested to read over the specifications of the MacArthur-Forrest cyanide patents for New Zealand, Victoria, New South Wales, United States, and Great Britain. The claim in each case he found was for the use of *cyanogen, or any compound containing or yielding cyanogen*, clearly implying that not only was cyanogen itself an effective solvent for gold, but that in all cyanogen compounds it was the active principle. That such was the belief of the patentees seemed obvious from a perusal of the British specifications, in which detailed instructions are given for applying an aqueous solution of cyanogen for dissolving gold from ores.

The author ventured to suggest that cyanogen was not a solvent for gold in the commercial sense, and afterwards in a conversation at the Government laboratory his opinion was supported by Mr. William Skey, to whom the question had not occurred in a concrete form, although he had been daily in conference with the Crown solicitors for some months previous to this; but that chemist, well known for the profoundness of his original research, stated that the general trend of his work for many years led him to support the author's view without hesitation.

The solution of the problem seemed easy enough, and for the to
wh
slim
He did n

* The judgment was in favour of the Cassel Company, the Judge basing his on principally on two curious assumptions, namely, (*a*) that cyanogen is ctive solvent for gold; and (*b*) that free cyanogen is liberated when gold by potassium cyanide.

Digitized by Google

purposes of the case Skey and the author made a series of experiments with cyanogen in aqueous solution in contact with gold. Skey's tests were of a qualitative character, gold leaf being used, while the author's were quantitative, weighed discs of gold being operated on. Both series of experiments showed that cyanogen did not dissolve gold, or only so feebly as to be ineffective as a solvent for extraction purposes.

The results of the author's experiments are shown below in tabulated form.

EXPERIMENTS TO DETERMINE RATE OF DISSOLUTION OF GOLD IN AN AQUEOUS SOLUTION OF CYANOGEN GAS.

A.—With disc of parted gold, $\frac{1}{4}$ in. diameter; weight, 0·340 grain.

| No. | Date. | Time. | Hours. | Weight of gold. | Dissolved. |
|---|---|---|---|---|---|
| | 1896. | | | gr. | gr. |
| 0 | 31st August | 4 P.M. | Nil. | 0·340 | Nil. |
| 1 | 1st September | 10 A.M. | 18 | 0·338 | 0·002 |
| 2 | 1st ,, | 4 P.M. | 24 | 0·337 | 0·001 |
| 3 | 2nd ,, | 10 A.M. | 42 | 0·335 | 0·002 |
| 4 | 2nd ,, | 4 P.M. | 48 | 0·334 | 0·001 |
| 5 | 3rd ,, | 10 A.M. | 66 | 0·332 | 0·002 |
| 6 | 3rd ,, | 4 P.M. | 72 | 0·330 | 0·002 |
| 7 | 4th ,, | 10 A.M. | 90 | 0·328 | 0·002 |
| 8 | 4th ,, | 4 P.M. | 96 | 0·328 | 0·000 |
| 9 | 5th ,, | 10 A.M. | 114 | 0·327 | 0·001 |

B.—With disc of parted gold, $\frac{3}{25}$ inch diameter; weight, 0·150 grain.

| No. | Date. | Time. | Hours. | Weight of gold. | Dissolved. |
|---|---|---|---|---|---|
| | 1896. | | | gr. | gr. |
| 0 | 2nd September | 10 A.M. | Nil. | 0·150 | Nil. |
| 1 | 2nd ,, | 4 P.M. | 6 | 0·149 | 0·001 |
| 2 | 3rd ,, | 10 A.M. | 24 | 0·148 | 0·001 |
| 3 | 3rd ,, | 4 P.M. | 30 | 0·147 | 0·001 |
| 4 | 4th ,, | 10 A.M. | 48 | 0·145 | 0·002 |
| 5 | 4th ,, | 4 P.M. | 54 | 0·144 | 0·001 |
| 6 | 5th ,, | 10 A.M. | 72 | 0·142 | 0·002 |

The gold discs were placed in fresh portions of cyanogen solution after every weighing, excepting in the case of Nos. 7 and 8 in the A series, which were returned to the same solution.

The author was pressed to express an opinion as to whether

Digitized by Google

the slight dissolution which took place was effected by free cyanogen or by a product of decomposition. He declined to commit himself, as he had no data to go on, but thought it was probably through the latter, as old solutions of cyanogen, that is, those which showed signs of decomposition by the deposit of azulmic acid, effected a more rapid dissolution of the gold than freshly made clear solutions.

When the discs were returned to the same solution no further perceptible dissolution of the gold could be detected, the results showing that the maximum action of the solution on the gold was exerted in the first 24 hours.

The cyanogen was made by distilling a mixture of two parts of yellow prussiate of potash and three parts of mercuric chloride in a glass retort.

The salts were powdered separately, thoroughly dried in a roasting dish, placed at the mouth of a muffle furnace, then mixed and placed in a perfectly dry warm retort. The gas was conducted through a small flask of distilled water, and then collected in a Winchester bottle filled with distilled water. The water became saturated after passing the gas for about an hour. The gas which came off in the first few minutes was not collected, or not until it burned with a distinctly purple flame. The aqueous solution gave a very distinct reaction for cyanogen by adding a little KHO to a small portion, and then a few drops of silver nitrate, when a heavy pale brown precipitate appeared, turning to opalescent white on addition of excess of $AgNO_3$.

The above results seemed conclusive enough, but Sir Robert Stout, leading counsel for the Cassel Company, contended that as the experiments were conducted on pure gold they did not apply to the action of cyanogen on gold in ores.

For the purposes of the appeal before the Supreme Court in May of this year, the author made a series of experiments to determine the action of an aqueous solution of cyanogen on gold in ores. He operated on an ore from the Martha lode at Waihi. This ore in the upper levels consists of grey chalcedonic quartz, and is entirely free from sulphides and foreign matter. It contains the gold so finely distributed throughout the matrix that from 90 to 95 per cent. of its value is extracted with a 0·3 per cent. cyanide solution at one operation. The value of the sample was £4 5*s.* 6*d.* per ton, the proportion of gold to silver being 1 to 3.

From this typical cyaniding ore an aqueous solution of free cyanogen extracted, after 72 hours' leaching, 0·82 per cent. of the gold and 1·13 per cent. of the silver, results which were subse-

Digitized by Google

quently confirmed by two different series of experiments, on the same ore, made by the author on behalf of the Victorian and New South Wales Governments.

Dr. J. C. Maclaurin, instructed by the Crown, also made a series of experiments with cyanogen, and although his report was completed some time before the hearing of the case, through some blunder he was not called as a witness; consequently the results he obtained were not available as evidence. Through the courtesy of the Crown solicitors the author was permitted to peruse Maclaurin's report, which corroborated the author's result in every respect.

Maclaurin found that a disc of gold agitated in an aqueous solution of cyanogen showed a dissolution of 1·5 milligram in 24 hours. Discs were placed in sealed bulbs in a solution of cyanogen gas in distilled water, freed from ammonia by boiling, one exposed in light for 7 days, the other in dark for 12 days, with results almost the same as above; in the light 1·5 milligram of gold being dissolved, and in the other 1·65 milligram.

Cyanogen in aqueous solution, on the authority of the latest edition of Watt's *Dictionary of Chemistry*, decomposes *slowly* into primary and secondary products, excepting of course an acid be present. The primary products are ammonium oxalate and carbonate, azulmic acid and traces of HCN and HCNO; the secondary, by the action of cyanic acid on water, being urea and a hydric ammonic carbonate.

Maclaurin stated that his cyanogen solutions decomposed rapidly, and with the refinement of manipulation which characterised his classical paper on the "Dissolution of Gold in Potassium Cyanide,"* estimated that in seven days only half the cyanogen originally present remained, either as cyanogen, HCN, or cyanides, the other being converted into azulmic acid, &c. He found the ammonia present in seven days amounted to 0·025 per cent., this being partly in combination as a cyanide and partly united with the other products of decomposition. He concluded his report with the statement that "cyanogen and water alone are incapable of dissolving gold and silver or an alloy of these."

The author, while gratified that his earlier experiments of 1896 were so fully corroborated by Maclaurin, found himself unable to agree as to the *rapid* decomposition of cyanogen in aqueous solutions. His cyanogen solutions did not exhibit more than a perceptible trace of decomposition in seven days, and in none did azulmic acid separate until after several months. He has found

* *Jour. Chem. Soc.*, May, 1893, p. 724.

Digitized by Google

it almost impossible, even with every precaution, to make cyanogen perfectly free from traces of ammonia, HCN, HCl, and even ammonium cyanide. The author is inclined to the belief that the ammonium cyanide Maclaurin found in his cyanogen solution was introduced during the preparation.

For the patentee's case, Professor Brown, of the Auckland University College, and Mr. H. H. Greenway, their New Zealand representative, also made experiments with cyanogen and Waihi ore. Greenway in his evidence stated that he obtained better extractions with an aqueous solution of cyanogen than with potassic cyanide, his results being—

| | | |
|---|---|---|
| With cyanogen | .. .. | 79 per cent. |
| „ potassic cyanide | .. | 78 „ |

Professor Brown stated that he extracted 47 per cent. of the gold in 36 hours, over 23 per cent. being dissolved in the first 24 hours.

The positive statements of these witnesses, backed by their experiments, were altogether unexpected, and on the evidence before the Court, quite overwhelming, and in no small measure influenced the decision of the judge.*

By an oversight no questions were asked as to how the cyanogen was prepared, except to elicit the information that a mixture of yellow prussiate of potash and mercuric chloride was used. Suspecting that an alkali had been unwittingly introduced into the solution used by these witnesses, the following month the author made a series of experiments with Waihi ore, using cyanogen prepared by distilling a mixture of the above salts in their *undried state*.

The results are shown in tabular form (next page).

* Since the above was written, Mr. Skey has sent the author a copy of a paper he read before the Wellington Philosophical Society, on the 7th October, 1896, detailing certain qualitative experiments he made with cyanogen and gold, which seem to show clearly enough that gold is insoluble, or only feebly so, in free cyanogen. Skey was a technical witness at the May case this year before the Supreme Court, at Wellington, but unfortunately refrained from giving evidence on this important point, thereby leaving the author wholly unsupported.

Digitized by Google

EXPERIMENTS WITH WAIHI ORE, JUNE, 1897.

| No. | Time of leaching. | Gold, per cent. extracted. | Silver, per cent. extracted. | Value, per cent. extracted. |
|---|---|---|---|---|
| a | 24 | 31·1 | 7·8 | 27·3 |
| b | 36 | 39·4 | 8·5 | 35·8 |
| c | 48 | 45·9 | 8·7 | 41·6 |
| d | 60 | 47·3 | 10·1 | 43·0 |
| e | 72 | 48·8 | 11·4 | 44·3 |
| f | 84 | 51·6 | 12·0 | 47·0 |

*Original Value of Ore per ton.*

| | oz. | dwt. | gr. |
|---|---|---|---|
| Gold .. .. | 0 | 17 | 10 |
| Silver .. .. | 4 | 11 | 14 |

These results are singularly confirmatory of those obtained by Professor Brown; but of course the dissolution of the gold and silver was not effected by cyanogen, but by the ammonium cyanide produced by the decomposition of the salts used, as shown by the following equations:—

$$2K_4FeC_6N_6 + 2H_2O + 5HgCl_2 = 8KCl + FeCl_2 + FeO + NH_4CN + 5HgC_2N_2 + CO$$

and

$$5HgC_2N_2 = 5Hg + 5C_2N_2.$$

Professor Brown recently exhibited to the author his method of making cyanogen. It was prepared from the undried salts, which at once supplies the explanation of the Professor's extractions.

Since June the author has conducted a number of tests to ascertain, if possible, what action is responsible for the feeble dissolution of gold, which undoubtedly takes place in cyanogen solutions, and the general trend of his results has been to show that the cyanogen acted superficially on gold, forming a film of auro-cyanide, insoluble in an aqueous solution of cyanogen, but readily dissolved in the small trace of ammonium cyanide which forms through contact with the atmosphere, or is introduced during the preparation of the gas. This would tend to show that cyanogen, as contended by Skey as far back as 1874,* is more

* *Trans. N.Z. Inst.*, vol. vii, p. 397.

Digitized by Google

closely related to oxygen than to the haloids, chlorine, bromine, and iodine.

The author noted in all his experiments that the cyanide solution, after percolating through the ore, possessed a brilliant purple colour which gradually disappeared in a few hours. The cause of this coloration he has not yet been able to determine. It may possibly result from some of the decomposition products of the cyanogen acting on the sulphur of the silver sulphides present in the ore. At any rate the subject is one worthy of further investigation.

---

## DISCUSSION.

**Mr. Claudet** said one great object-lesson in the paper before them had occurred to him, viz., how careful one had to be in making investigations of the nature of those in the paper, and he thought it was shown conclusively that Mr. Park was correct in the views he had expressed. Certain people had tried to extract gold by the use of cyanogen, and did extract gold; the author tried with cyanogen and did *not* extract gold, but he took the precaution of purifying his cyanogen, while the other people did not. Mr. Park appeared to prove conclusively that the solution of gold was not effected by cyanogen, but by the ammonium cyanide formed, in some way or other, by the decomposition of the salts used in producing it. The paper itself was a very valuable one, and the Council had for a long time past been gradually collecting all the information they could obtain with reference to the cyanide process and its work in all parts of the world. Such details could not fail to be of value, as in his opinion the cyanide process was going to perform still greater wonders in the future than it had achieved in the past. With regard to the experiments, he was quite sure, from the way the author described them, that he must have taken great pains, and they might accept what he said on the subject as being correct. Another matter which suggested itself to him was that a copy of the paper should be sent to the New Zealand Government from the Institution in order to call their attention to the matter.

**Mr. McDermott** thought that great care had been taken by Mr. Park to discover the discrepancies which existed between his own results and those obtained by others. The evidence which he brought to bear in support of his conclusions certainly seemed

Digitized by Google

to give him an absolutely unattackable case. He thought, however, that the circumstances did open the way for placing the author's paper before the Crown solicitors in New Zealand. He certainly considered that the paper in itself was a very valuable addition to the literature on the cyanide question.

**Mr. D. A. Louis** said that he was very glad to find that the author took up the position that cyanogen alone did not dissolve gold. It might have been interesting if experiments had been tried to show whether there was any possibility of dissolving gold in a solution of cyanogen *with* the addition of oxygen. He thought the author's experiments would have been far more interesting if they had been conducted in the same way as those of Dr. Maclaurin. As the solution increased it ought to be shown that the amount of cyanogen used was very much greater; but that was not brought out in the paper. Many of them had used cyanogen —some active cyanogen, and others ordinary cyanogen; ordinary cyanogen did not dissolve gold, but they had heard that active cyanogen did, therefore he thought the addition of such data would be valuable.

**The President** said that the paper was one in which he took a great interest, and the author gave a large amount of information which was bound to be of value. He was greatly struck by the footnote, which stated that the judge based his decision principally on the two curious assumptions, viz., (1) that cyanogen was an effective solvent for gold, and (2) that free cyanogen was liberated when gold was dissolved by potassium cyanide. When the case was tried, there was available in the Colony, if not in the Court itself, copies of the proceedings in the first cyanide case in London, the Pielsticker case, and also a great portion of the depositions in the Transvaal cyanide case, and in both of those the statement was very clearly made that pure cyanogen in pure water did not appreciably dissolve gold, if at all. It was further stated for Mr. MacArthur (if not by him), that cyanogen had been employed in their process for dissolving ores with success, and if he (the speaker) remembered rightly, the question as to whether it was asserted that pure cyanogen in pure water dissolved gold was pressed rather strongly, and no such statement was made. He had personally been a witness in both cases, and as far back as 1894 the same question was being threshed out in connection with the Pielsticker case, and he designed a series of experiments, some of which were carried out in Mr. Harland's laboratory, and some in that of Mr. Vautin, on the question of the solubility of gold in cyanogen

Digitized by Google

gas solution. The results at first appeared to show that gold was, to a certain extent soluble, but it occurred to him that in all the methods they then had of producing a solution of cyanogen gas there was the risk of traces of ammonia being present. They took the very greatest pains to eliminate the ammonia; they washed the gas very carefully through an acid solution, they used very pure distilled water which had, as far as possible, been kept from the risk of absorbing ammonia and had been re-distilled, and they found that, using a solution of cyanogen gas to the extent of about 1½ in 1,000, they could not detect any weight of gold dissolved at all. They added the smallest quantity of ammonia solution they could obtain—a drop of a very dilute ammonia solution—and an energetic solution of the gold began. There was no doubt whatever, from the series of experiments carried out both separately and together, that a mere trace present in the solution was sufficient to determine the solution of a comparatively large amount of gold. These results were on record, and were available to the New Zealand Government: they knew that the patent had been declared invalid in the Pielsticker case in London, and also in the Transvaal, and they knew that in Victoria an application to amend the patent had been refused—yet they came to the decision stated, which, as far as he could see, was not based on any evidence with the exception of that of the two gentlemen who treated Waihi ores, and whose treatment of them consisted of passing a cyanogen solution through the ore. The ore treated was doubtless mixed with all kinds of things, and it was almost absolutely certain that ammonia was present, and there was therefore little wonder that the cyanogen solution used in that way obtained the result described by the author. It did not by any means follow, however, that the statement in the patent, that cyanogen was an effective solvent of gold, was true—in fact, the contrary was the case. Mr. Skey, the Government chemist, who was one of the earliest to study the question of the action of cyanide upon gold, was not called at all; he thought that was very strange, because the work done by Mr. Skey, and the paper read by him in 1877, contributed very largely to bringing about the decision which was obtained in London. Mr. Park in describing his experiments stated that he passed the gas through a small flask of distilled water, and then collected it in a Winchester bottle filled with distilled water, and the water became saturated after passing the gas for about an hour. It was perfectly clear that if the author passed the gas for that length of time any ammonia

Digitized by Google

present in the small wash bottle would pass into the large bottle. He thought that in the author's first series of experiments, where a small quantity of gold was dissolved, it was beyond question that traces of ammonia were present, which would sufficiently account for the result. It seemed to him that the counsel for the Cassel Co. used the argument which was used in the English case (and which was treated by Justice Romer with the consideration it deserved), that although certain results might be obtained by treating pure gold, it by no means followed that such results would be obtained when treating gold in ores. It was pointed out over here that anyone who looked at the matter dispassionately could see no difference between treating pure gold by itself in the form of powder, and treating pure gold in the form of powder mixed with powdered quartz. Such a mixture of pure gold and quartz would be the best typical ore for cyanide treatment, and experiments made showed that gold when mixed with quartz was dissolved even more rapidly than in the case of pure gold alone, owing to the presence of air in the mixture. He was in Auckland at the beginning of last year, and had the pleasure of seeing Dr. Maclaurin, and discussed with him the question of the solubility of gold in cyanogen, and that gentleman explained to him the results he had obtained. Dr. Maclaurin had been working on the subject, and they both came to the conclusion that in all probability the small amount of gold which he had found dissolved, was due to the great difficulty of preventing such a slight decomposition of the solutions, more especially when using strong solutions of cyanogen, and the formation of ammonia in some form or other. In the results of Dr. Maclaurin's experiments set out in the paper, the strength of the cyanide solution was not stated; they were told that a disc of gold agitated in an aqueous solution of cyanogen showed a dissolution of 1·5 milligrams in 24 hours, but they were not informed as to what percentage of cyanogen was present in the solution, neither were they told what was the surface of the gold exposed. They had, therefore, no data to enable them to calculate the rate of solubility, but he thought that the bulk of the experiments, and the balance of the evidence was very strongly in the direction of showing that a solution of pure cyanogen in pure water did not dissolve gold. A solution of impure cyanogen in impure water in many cases did dissolve gold, and he thought that was where the difference in the results was obtained by the various experimenters. It would be observed that Professor Brown explained his method of making cyanogen to the author, and that Mr. Park was quite satisfied,



Digitized by Google

from the method employed, that ammonia must have been present in the cyanogen solution.

The next paper read was the following.

## "Mexican Methods of Mining."

By S. B. Newall, M.Inst.M.M.

The way in which mines in Mexico have been worked by Mexicans may be divided, roughly speaking, into two classes: those that have been unsystematically worked without development, and those that have been systematically developed. A good deal has been heard in England about the former class—and they certainly deserve all the abuse and ridicule that has been poured upon them. They have in nearly all cases been owned by private individuals, who worked them entirely on the "tribute" system, allowing the tributors to find and extract the ore as best they could, and without any preconcerted design or thought for the morrow. Of the latter class so little is known that the general idea seems to be that they are non-existent. This, however, is by no means the case. Many native companies have worked and are now working, which, for economical management and results obtained, compare favourably, and even surpass the foreign ones.

For the last 350 years the inhabitants of such places as Guanajuato and Zacatecas have lived by mining alone; the whole prosperity, and indeed the very existence of these places and others like them, depended upon their mines; droughts, rain, and harvests affected them only as they affected the mines; the prices of articles required for working them were of more importance to them than the price of food. The people are born miners, and the man in the street often knows where to look for pay-ore far better than some of the highly paid managers in charge of mines worked by foreign companies.

To properly develop a mine, capital is required, and, consequently, those that come under this category are almost always worked by companies. The *modus operandi* of a typical Mexican mining company in successful operation is as follows:—

*Direction.*—This is in the hands of five directors, a president,

Digitized by Google

a treasurer, and three members elected by the shareholders of the company from among their own number. The president holds the power of attorney for the company, has ample powers to direct the working of the concern, and appoint all employés; he is supposed to consult the other directors at least once a month, and expected to visit the mine and the reduction works not less than once a week. The president and the treasurer are remunerated for their services by a percentage of the dividends, and in some cases the treasurer is allowed the salary of an accountant.

*Mining Staff.*—This consists of the manager, with a young engineer as assistant, a timekeeper, a storekeeper, and the captain of the ore yard, besides blacksmiths, carpenters, stablemen, masons, watchmen, &c., on the surface; and underground, of a mine captain with two assistants, or two captains, a day and a night one, a foreman of the carriers, and a man in charge of the tools.

*Development.*—This is by a vertical shaft designed to intersect the lode at a certain depth, generally from 600 to 700 ft., from which crosscuts are driven to the lode at intervals of 100 ft. or more, according to circumstances, and horizontal drifts made along it with crosscuts into the country rock on the foot and hanging walls, where such are deemed advisable, and winzes communicating the different drifts. From a convenient point, preferably on the outcrop of the lode and differing in level as much as possible from the mouth of the shaft, a series of winzes, to serve as a roadway, is made into the mine by which all the men enter and come out, none being allowed to do so by the shaft except under exceptional circumstances. Sometimes it is subsequently found necessary to sink one or more shafts, and of late years a preference for inclined ones has manifested itself. The drifts and crosscuts are generally made 2 metres high by 2 metres wide, and are paid for by the running metre, the price being fixed every week by the manager, four couples in two shifts being employed in driving them; only very occasionally in cases of urgency are six couples in three shifts employed. Sometimes crosscuts are contracted out to only two couples working one by day and one by night; they are then expected to be 2 metres high by 1 metre wide. In the best managed mines in the Zacatecas district and generally throughout the country the mine provides and keeps in repair all the tools, and supplies lights, explosives, and all other materials required for the work; in some places, however, the men have to find themselves in everything, even



Digitized by Google

having to sharpen their own tools—a very fruitful source of waste of time.

*Drainage.*—In pre-railway days only a few mines were drained by steam power, the usual method being by horse whims, with large bags or pouches made of raw hides with an iron ring at the mouth. This method was adequate in most cases, as water is not very often found in great quantities in Mexican mines; when it was, or when a mine was deep, the alternative often lay between the adoption of steam and the suspension of work. The cost of steam engines was so great, the difficulties of transport, and getting men to properly attend to them, so disheartening, and the wood fuel often so scarce and dear, that native companies very seldom had them. The efforts that were sometimes made to cope with the water, especially in deep mines, might almost be called heroic. The author's father had eight horse whims drawing water from one shaft, besides more working in other shafts, when he examined the Vetagrande lode at a depth of 1,100 ft.; and in the Bolaños Mines, according to a report published by the Government at the end of last century, in the year 1792 there were 14 horse whims, with 28 ropes, drawing water from one shaft, besides others working in two other shafts. This shaft, which seems to have astonished the author of the report, was, he tells us, only slightly over 11 ft. square, and was sunk and timbered to a depth of 657 ft. in 13 months during the years 1789 and 1790; it was timbered to form a shaft within a shaft, 16 ropes from 8 whims working in the outer parts, and 12 ropes from the other 6 whims in the centre space. He also reports that over 1,500 workmen, and more than 3,400 horses and mules were employed; the pay rolls were from $14,000 to $18,000 a week; the inhabitants numbered 5,676, of whom 100 are called Europeans, and 2,277 Spanish freemen,* and that the priest's stipend was $5,000 a year, because the place was so prosperous!

The whims have a horizontal arm about $3\frac{1}{2}$ ft. above the ground, to each end of which two horses are hitched; to reverse, the horses have to be unhitched, turned round, and hitched to the other end of the arm. They occasionally get beyond control, flying round with terrible velocity, the horses being nearly always killed, and the drivers not always escaping.

Whims with diagonal arms, starting from the top of the axle, were introduced some years ago, with which it is not necessary to unhitch the horses to reverse, as they can be turned round by passing under the arm, and yet the pull is at a point sufficiently

* Mexico was then a Spanish colony, and foreigners were called Europeans.

Digitized by Google

low to enable them to exert their full strength. When a considerable quantity of water has to be combated, the horses are kept going at a gallop, and so hard is the work that the ground is sometimes wetted by their sweat and turned to mud, and if they are to be kept in good condition, they cannot be worked for more than two out of the 24 hours.

Much use has not been made of adits, because the hill slopes although steep near the top are generally not so near the base, and sufficient depth can seldom be obtained without making them very long.

*Extraction.*—Mexican miners nearly always work in couples, one striking with a two-handed hammer, and the other holding and turning the drill. When employed on the extraction of ore they are paid in one of the following ways :—

*With a part of the ore they extract.*—This system is advantageously employed in places where the ore is rich (though in narrow streaks or patches), as is often the case on the borders of a rich chimney and in pocket veins, and where it has to be looked for and picked out of a mass of worthless stuff.

*On the amount of ore extracted.*—Their payment is calculated by the load of 300 lb. of cleaned ore.

*By the holes drilled.*—Each couple drills and loads two or more holes of a given depth at the spot, and in the direction indicated by the mine captain, for which they receive a day's pay.

To work out an ore body they prefer to attack it at the top, and work downwards on it, alleging that the increased power that can be put into a down stroke in drilling with the heavy hammer more than compensates for the smaller quantity of stone that is loosened by the blast. The ore is taken from the workings to the shaft on the backs of the carriers, the worthless stones or deads being used as much as possible to fill up old workings, the very rich ore being put in bags before it is taken to the shaft. Each carrier fills his bag with the smaller stones, and balances it on his back by an endless loop—part of which is of leather about 2 in. wide—passed round it and resting on the top of his head, and piles the larger stones on the top, leaving both hands perfectly free. The weight of stones usually carried by men is from 200 to 250 lb., but there have been instances of men carrying much more.

*Ore Yard.*—The ore and stones are hoisted by horse whims, packed in leather pouches, which are emptied at the mouth of the shaft, from where it is taken to the ore yard on wheel or hand barrows. The ore extracted by each couple or set of couples is accompanied by a bag full of the same having a dis-

Digitized by Google

tinctive mark made of knotted, plaited, or twisted string. These marks are very simple and ingenious, having distinctive names, and are further varied by the part of the bag to which they are attached. They can be divided into groups, and when assigning marks to the men, care is generally taken to confine each group to one part of the mine, and to men working under similar conditions, so that in the ore yard the part of the mine from which the ore was extracted, and the conditions under which the men who extracted it worked, is at once known. In some mines the names of these marks appear in the pay rolls instead of those of the men who extracted the ore.

If there are any tributors at work in the mine the ore extracted by them is put in one part of the yard, and when it has all been hoisted they are called in to divide it into two, three, four, or more equal parts, according to the conditions on which they work, the most usual being two-thirds to the mine, and one-third to the men. When this has been done, the manager or the captain of the ore yard, comes and chooses which parts are to belong to the mine, and these are at once carried to another part of the ore yard. On behalf of the mine, a price is offered to the men for their part of the ore, but there is no obligation on their part to accept it, as in most mining centres there are plenty of men with reduction works who are ready to buy, and in some places are even admitted into the ore yard to treat with the men.

The ore is broken, hand picked, sorted into different classes, and weighed, the breakers being paid by the amount they pick, the captain taking care that bad stones are not passed or good ones thrown away.

*Assays.*—A sample of each of the classes into which the ore is sorted is taken and assayed every week, and besides this four samples are taken of the ore from each heading and working in the mine; one from the coarse gravel made at the time the ore is broken in the yard, another from the fine, and two more from the gravels that come out of the mine with the ore, the coarse gravels being in both cases hand cleaned first. Samples taken in this way have been found to be most reliable and to give a very exact idea of the values of the ore found in the different parts of the mine.

*Horses.*—As can be readily inferred from the preceding remarks, horses play a very useful part in working a mine; their keep is a very considerable item of expense, and the care that has to be taken of them is by no means an unimportant part of the duties of the manager. They are almost always used in the mines in preference to mules, because they are much better for the quick

Digitized by Google

work of the whims, and are cheaper. The best food that can be given them in Mexico is barley-straw and maize, and the green tops of the maize cane, or other green food when obtainable.

*Pay-day.*—Under the old Spanish mining laws, which were in force in Mexico until about ten years ago, it was obligatory to pay the men every week. To do this the ore extracted from Monday to Thursday is paid for on the Saturday, and that extracted on Friday and Saturday, on Tuesday or Wednesday; at this mid-week payment loans or advances are also made. At some mines the contract work is measured up and paid for on Sunday morning, as otherwise the men do not work on Saturday or Saturday night. From all the men receiving more than $2, 6 or 10 cents are deducted, for which they get free medical attendance and medicines for injuries and illnesses caused by their work, as well as a weekly allowance while they are unable to work, and compensation to their families in case of death by accident.

*Reduction Works.*—Before the introduction of modern methods the reduction of the ore was carried on in completely separate establishments, often at a considerable distance from the mines, to which the ore was sent on mule or donkey back, or in carts.

The method of working the mines, described in this paper, crude though it may appear, is very well suited to the majority of the Mexican mines. As a rule the pay ore found in them is intermixed with worthless vein stuff, and seldom in large compact bodies, every part of which is rich enough to cover the cost of reduction; even in the large rich chimneys and pockets that have given big "bonanzas," a considerable quantity of worthless stone has been found mixed with the good ore, and with labour so cheap and hand pickers so expert, a considerable economy is effected by separating the unprofitable part. Nor is the use of steam power always accompanied by economy; coal is unobtainable in the majority of places, and wood fuel is generally dear, skilled labour difficult to obtain, and to repair or replace breakages, long and vexatious delays are only too likely to occur. On the other hand horses are cheap, Mexicans skilful in managing them, and for the working of an ordinary mine quite efficient. In reduction works, however, the advantages of steam machinery very far outweigh the difficulties of its employment.

### *Prices and Costs.*

The following figures apply more particularly to the Zacatecas District, and are about the average prices ruling there, but of

Digitized by Google

course greatly vary in different mines, and even in the same mine under differing circumstances.

*Salaries.*—Managers, $50 to $80 a week; timekeepers, $15 to $25; storekeepers, $10 to $15; captains of ore yard, $12 to $16; mine captains, $10 to $15; blacksmiths and carpenters, $10. All salaries are paid weekly.

*Wages.*—Miners, $0·75 to $1 a day; labourers, $0·50 to $0·75; boys, $0·25 to $0·50.

*Driving headings*, $20 and upwards the running metre, the most usual being $30 to $40, occasionally as high as $100. Sometimes progressive prices are paid, thus: $20 for the 1st metre, $30 for the 2nd, and perhaps $60 for the 3rd and over, driven during the week; this is generally done when quick driving is desired, in which cases the miners not infrequently earn $12 a week each.

*Extraction.*—When payment is made on the amount of ore raised, the most usual prices are $1·25 or $1·50 per 300 lb. of cleaned ore.

*Ore breakers* are paid $0·25 to $0·50 for 300 lb. of clean ore picked.

Unbroken horses cost $15 to $20; mules, $25 to $30; maize, $5 to $7 the load of 300 lb.; barley straw, $0·15 to $0·25 for 25 lb.; blasting powder, Mexican, $3 to $3·50 for 25 lb.

At the end of the seventies and the beginning of the eighties in the mine of San Rafael, the total cost of mining, including drainage and development work, was about $15 per ton; the reduction, exclusive of quicksilver, about $9; the quicksilver consumed must have been, on an average, from $3 to $6 per ton of ore treated; the profits about $50,000 a month. The called-up capital of the Company did not exceed $24,000.

At the Vetagrande Mines at one time the total expenses of mining did not exceed $10 a ton.

In conclusion, a plea must be put in for the Mexican miner, and the much abused and misunderstood "notched poles" he uses as ladders.

The Mexican miner is a rather slow, but, if patiently treated, a docile and steady worker. The mistake generally made by Englishmen and Americans is to bluster and to try to hurry him too much; this only confuses him. He thinks slowly, and does not readily understand the orders that are given him, especially if these be jerked at him in a language he only partially understands. He must not be made responsible for the very wretched way in which many of the mines have been worked, without taking

Digitized by Google

into consideration the obstacles he has had to overcome. Some mine owners never spent a single cent on their mines; the working miners were allowed to extract the ore as best they could, receiving a part of it in payment, but were given no help whatever, either for works of investigation, timbering, or even for the maintenance of roads, the owner's sole contribution to the management being an employé to divide and receive the ore. When it is remembered that under these circumstances mines have been worked to depths of 600 ft. and more, as has been the case in the mine of San Eligio, near Mazapie, it must be confessed that the Mexican miner has some good qualities.

The notched poles are certainly very formidable and uncomfortable on first acquaintance, but when one has *learnt* to walk on them, and has become accustomed to them, they are found far more comfortable than ladders, and the reason is very simple. On the notched poles the *whole of the foot rests* on the notches, and the weight of the body is properly distributed between *heel and toe*, whereas on a ladder a square inch or two of the fore part of the foot has to do all the work, *the heel not being used at all.* The discomfort of ladders is not fully realised by those who are well shod and have only to carry their own weight, but to a Mexican miner, with his thin leather sandals and a bag of stones on his back, it is very real indeed, and the attention of English miners working in Mexico should be drawn to this point, so that they may avoid giving great discomfort to their workmen by what they erroneously think is an improvement, viz., the substitution of ladders for notched poles in a Mexican mine.

---

## DISCUSSION.

**Mr. Pearse** thought a great deal of the author's description was very local, and many of the methods he mentioned were out of date. He was in Mexico a short time ago, and was much struck with the comparatively good condition of mining in that country. A great many of the mines, managed by local companies, were doing very well. The reason for the apparent non-success of Mexican mines had to be looked for below the surface, and it was due to the fact that many of them were not intended to make a profit, and he knew of a group of mines which, although making £70,000 to £80,000 per annum profit, had never paid, and never would pay, anything. This state of things was owing to

Digitized by Google

the fact that it was to the interest of those controlling the mines to keep them always in debt, and it was into the pockets of those people that the profit went. It was well known that the method of working the mines adopted by the Mexicans was a very poor system of underhand stoping. The various pay-days mentioned by the author were not now observed; pay-days were now almost any time that was desired, but, as a rule, were in the early part of the month after the accounts for the previous month had been squared up. He thought that Mr. Newall's paper, although interesting, was more of a history than a description of modern methods.

**Mr. J. H. Collins** agreed with Mr. Pearse that the paper was mainly a matter of history, and said that he was unable to accept most of Mr. Newall's generalisations. In the first place, he did not know of any country where the mines could be divided into two classes—well worked and ill worked. His experience was that the majority of mines were intermediate in that respect. The author then went on to say that the mines which had been unsystematically worked deserved all the abuse and ridicule that had been poured upon them; personally he was of opinion that many of the mines were of such a character that they could not be worked upon any definite system, and sometimes the local conditions were such as to make it advisable that they should be worked from hand to mouth; the whole matter depended upon the circumstances of each particular mine. He knew of a very rich silver mine in the north of Mexico which was worked from hand to mouth, and yet was exceedingly profitable. Whenever they wanted money, they simply went into the mine, took out some of the ore, smelted it in their furnace, and used the silver to pay for what they wanted. Although those mines were worked in a most unsystematic manner, the ore bodies were followed, and the ore taken out as it was wanted and a good profit made, and in that particular instance it was certainly better to work from hand to mouth. He agreed with Mr. Newall's remark that the Mexican miners knew better than the most highly paid managers where to find pay ore, and so they should. It was not the place of the manager to find pay ore; it was his place to find men to find pay ore, which was a very different thing. With regard to shafts, he supposed the author was dealing more particularly with Guanajuato; but in the district of Zacatecas, with which he was well acquainted, vertical shafts were exceedingly rare; in fact, he did not remember more than two or three vertical shafts over 100 ft. deep, and even those

Digitized by Google

were sunk for special purposes. Where there was anything approaching a vein, it was generally an incline shaft such as was used in Cornwall and elsewhere. As to underhand or overhand stoping, that again was a matter of circumstance. With a regular fissure vein opened up by proper shafts, &c., there was no doubt a great advantage in overhand stoping; but with hard rock and a large mass of stuff to bring out, he thought the Mexican miner was quite right in keeping to his underhand stoping. He would like to have some further particulars about the shaft mentioned by the author which contained such an enormous number of hoisting ropes, buckets, and kibbles; he certainly did not see how there could be room for everything in an 11 ft. shaft. As to horses and mules, he believed that mules were more commonly used in mining in Mexico than horses, and that was more particularly the case in hoisting from below.

**The President** thought the paper was a very interesting one, and being more or less historical was valuable in that respect. He had seen something of Mexican mining, and agreed with the views expressed by Mr. Collins and Mr. Pearse. He thought the author referred rather to one particular district in his description of the methods of mining, but nevertheless the statement as to cost of working, materials, &c., was bound to be of value to the members.

Digitized by Google

## FIFTH ORDINARY MEETING, 16th February, 1898.

Mr. JAMES MACTEAR (*President*) in the Chair.

The minutes of the previous meeting having been read and confirmed,

The following paper was read.

## "Notes of a Visit to the Gold Mines at Kalgoorli, Western Australia."

By WM. FRECHEVILLE, M.Inst.M.M.

HAVING heard, doubtless like many others interested in mining, of the opening of a new great gold district at Kalgoorli, in Western Australia, the writer was induced to go there to see for himself, and hopes that the following notes of his visit may be of some interest to his fellow members of the Institution.

Kalgoorli, or "Hannan's" as it used to be called, where alluvial gold was first found in June, 1893, is now reached by a railway journey of 385 miles from the coast, taking about 18½ hours. The alluvial deposits, which are still being worked by "dry blowing" in a desultory way, are in the immediate neighbourhood of the town, but the rich veins or "formations" about three miles to the south, on which the place bases its prosperity, were found later. At first these mines were not thought much of amongst the many new localities being opened out, but are turning out so well that they now form far and away the brightest spot in West Australian mining.

*General Features of the Mines.*—On looking at a map of what is known as Hannan's Belt it is seen that the mines extend for a length of about 8 miles in a north-west and south-east direction, and for a width of about 2 miles. In this area there are the usual large number of properties of little or no value, but fortunately for the district and for West Australia generally, a very rich group of mines is being opened out in the southern part of the field. Some eight or nine properties form a group or centre, the developments of which, although only reaching an extreme depth of 300 ft., may be described as phenomenally rich, there being ore already in sight amounting to a value of many millions sterling. Surrounding these rich mines is a fringe of an equal, or slightly greater,

Digitized by Google

number of mines of second importance, some of them with good promise of being dividend payers. Beyond this centre there are two or three mines some miles away which promise fairly, but nothing, so far, of first importance, or evidence of the extension or recurrence of the very rich formations so notable in the centre.

Present appearances go a long way towards justifying the claim the writer has heard put forward, that the centre forms the richest square mile of gold mining ground known anywhere. Regular crushings of from 2 to 4 oz. per ton in 20 and 30-stamp mills have been quite the order of the day, in spite of the fact that 6 to 8 ft. is quite a moderate size for the stopes, and they not unfrequently go up to a width of from 15 to 20 ft. Doubtless, when large mills more in proportion to the size of the mines are got to work the quality of the ore will fall off, as it should do, owing to the working of the poorer ores, which are now doubtless left on one side; but there is every indication that very large mills can be kept supplied with ore of a highly paying quality.

*Notes on the Ore Formation.*—The rich central area before referred to has a length of about a mile and a quarter in a north and south direction (from the Ivanhoe and Golden Horseshoe on the south to the Hannan's Brown Hill to the north), with a greatest width at the southern end of about three-quarters of a mile. In this area of less than a square mile some 15 or 16 parallel veins, running in a north-west and south-east direction, are being worked, and the probabilities are that others will be added to the list as the ground is more carefully explored. These general conditions are illustrated in the following sketch.

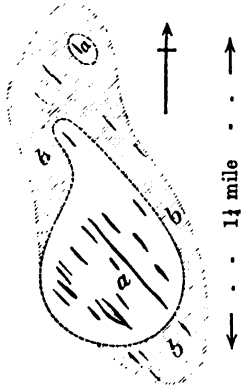


*a*. Rich ground.
*b*. (Shaded) fringing ground of less richness.

Digitized by Google

The above sketch is not intended to define the limits of payable ore, but to indicate generally the conditions existing in August, 1897.

As an instance of the strength of the ore formations, it may be mentioned that in the Lake View Mine they have driven some 2,400 ft. on their so-called main lode, with, it is stated, payable ore practically all the way, the vein on the whole being of great width, in places going up to as much as 20 ft., and the average width being from 8 to 10 ft. The same vein is being worked immediately to the north-west in the Boulder Perseverance Mine, where they have driven several hundred feet on it, and in one place opened a stope 50 ft. in width, of which they claim 30 ft. to be ore. Several of the other mines are showing ore shoots or bodies of great length.

Two prominent varieties of country rock were noticed in going through the mines. One, forming the country rock of the western mines, such as the Ivanhoe, Golden Horseshoe, Great Boulder, and Lake View, and also the predominant country rock of the whole belt, is a fine-grained, green, massive rock of only moderate hardness, being easily scratched by a knife, with a homogeneous appearance, although on looking very closely into it, very minute specks of glassy quartz, of a black metallic-looking mineral, and an occasional speck of pyrites, can be seen here and there. The other rock, of a grey appearance, was noted in the more eastern mines, such as the Australia, Kalgoorli, &c. This rock has also generally a homogeneous appearance, and, although of a distinct colour, has a good deal of resemblance to the green variety, both in its low degree of hardness, its texture, and in having fine specks of pyrites and of a black metallic-looking mineral scattered through it. Specimens of both rocks, when powdered and treated with acid, were found to effervesce briskly, showing the presence of a considerable amount of carbonates, which is in agreement with their appearance, hardness, and texture, which suggests the presence of a considerable amount of carbonate of lime, and were, in fact, the cause of the tests with acid being made. Sometimes, as in the Australia workings, both varieties of rock are met with in the same mine.

Being unable to identify these rocks, the writer took samples to Sydney, and submitted them for microscopical examination to Mr. Geo. W. Card, Mineralogist to the New South Wales Mines Department and Curator of the Museum there, who very kindly examined them.

Regarding samples of the green rock, one from the Lake View

Digitized by Google

Mine and the other from the Great Boulder, and a characteristic sample of Great Boulder ore from a winze below the 200 ft. level, Mr. Card writes:—

> "The rocks I have examined are very highly altered, but this much seems clear: the country consists of an acid igneous rock, either granite or porphyry, the latter I think. The ore is the same rock, only still more altered, having had a schistosity imparted to it as an effect of the intense crushing. A further point of some interest is the existence of ilmenite in both the country rocks, more especially in that from Lake View."

Regarding specimens of the other country rock, of a grey colour, from the Australia and Kalgoorli leases, Mr. Card writes:—

> "The country rock of the Australia Lease I consider to be a highly altered granite rock. It contains magnetite in addition to the pyrites.
>
> "The typical Kalgoorli ore is a very much altered igneous rock, probably granite. It too contains magnetite in addition to the pyrites.
>
> "The country rock of the Australia East Lease is a highly altered igneous rock of doubtful nature. It may have been felsitic, but not granitic, I should say, as there is no quartz.
>
> "The typical ore from the west lode, Australia Lease, contains ilmenite in addition to the pyrites. I take it to be a highly crushed granite.
>
> "It seems to me that our former opinion stands confirmed, viz.: (*a*) It is an igneous area consisting of acid rocks, largely granitic perhaps.
>
> "(*b*) There is no essential difference in nature between ore and country.
>
> "(*c*) The metallic minerals have been introduced along zones in which the crushing and other alteration effects are at a maximum."

The veins or "formations," as they are often called locally, in which the gold is found, are of a somewhat unusual and very interesting type.

In the shallow workings of the mines, where both ore and country rock are decomposed into an iron-stained clayey material, the ore being often apparently free from quartz, it is very difficult to distinguish one from the other by the eye. This renders the tracing of the outcrop on the surface difficult. In the deeper

Digitized by Google

workings, however, below the influence of surface action, it is, as a rule, not so difficult; in fact, although there is often considerable similarity, it is usually pretty easy, particularly in the richer mines, to say which is ore and which is country. The veins have as a rule, although not always, pretty clearly defined side surfaces or faces, which form practically the limits of the ore, and may be regarded as foot and hanging walls, between which the vein-filling, although often composed in the main of the same material as the country rock, varies in such a way as to be easily distinguished from it. The country rock is massive, and contains only a little iron pyrites as minute specks here and there, whilst the ore is schistose and has fine iron pyrites plentifully disseminated through it, and the schistose surfaces are covered with lustrous material, suggesting mica, or talc and chlorite. Sometimes the vein-filling consists principally of quartz, as is often seen in the Ivanhoe and Great Boulder veins, and is quite like ore from a well mineralised quartz lode of the ordinary type, but as a rule it is of the schistose country rock type described above, and varies in general appearance with the containing country rock; that is to say, when occurring in the green variety of rock, the vein-filling will have a similar green colour, and when occurring in the grey variety, it will be grey. Samples of ore from several mines were tested with acid, and like the country rock were found to effervesce briskly.

In order to see what light would be thrown on the similarity of ore to country rock by chemical analysis, the writer had a characteristic specimen of Great Boulder ore (not the quartzose variety), and of the country rock from the same neighbourhood, analysed by Dr. Helms, of Bridge Street, Sydney, with the following results:—

| | Ore. Per cent. | Rock. Per cent. |
|---|---|---|
| Sulphur | 5·49 | 0·22 |
| Carbonic acid | 8·38 | 11·73 |
| Titanic acid ($TiO_2$) | 2·57 | 0·71 |
| Soda ($Na_2O$) | 2·93 | 2·46 |
| Potash ($K_2O$) | 2·25 | 2·94 |
| Soluble in Acid:— | | |
| Oxide of iron | 17·84 | 9·69 |
| Iron as pyrites (calculated from the sulphur as $FeS_2$) | 4·80 | 0·19 |
| Alumina | 6·62 | 4·62 |
| Lime | 4·77 | 8·20 |
| Magnesia | 4·87 | 5·35 |
| Copper | 0·14 | 0·05 |
| Manganous oxide | traces | traces |
| Silica | 0·21 | 0·28 |

Digitized by Google

| | Ore. Per cent. | Rock. Per cent. |
|---|---|---|
| Insoluble:— | | |
| Silica | 34·83 | 42·48 |
| Ferric oxide | 1·14 | 1·26 |
| Alumina | 3·05 | 9·29 |
| Magnesia | 0·10 | 0·24 |
| | 99·93 | 99·71 |
| Gold | traces | traces |
| Silver | 4 dwt. 21 gr. per ton | 3 dwt. 6 gr. per ton. |

The lime and magnesia found in the soluble portion would require 9·08 per cent. carbonic acid for the ore, and 12·32 per cent. for the rock, so a small part of them must be in combination with silica.

The sample of ore came from a winze below the 200 ft. level, and the country rock from the same neighbourhood.

A natural explanation of the mode of formation of these veins appears to be that great pressure has exercised its maximum effect along certain zones, producing the schistose structure, and furnishing the channels for the percolation of the mineralising solutions which have deposited the pyrites and tellurides, and in places quartz. When the zone of schistosity is of great width, the mineralising solutions appear to have often been confined to certain parts of it, sometimes producing several parallel bands of ore, separated by more or less unproductive material. The zone along which the pressure has exercised its maximum effect may have been determined by previous or simultaneous fissuring of the rock.

Locally, the term "lode" is applied to the ore formations when of a clearly defined character, differing markedly from the non-productive rock, and bounded by fairly clearly defined surfaces or walls as, for instance, in the Great Boulder, Ivanhoe, and Lake View Mines; and the term "formation" when the zone of schistosity is of greater width, and the difference between gold-bearing and non-goldbearing material is not evident except by assay. The same vein may apparently exhibit both characteristics in different parts of its length. The Lake View vein in the Lake View ground is clearly defined, whilst in the adjoining mine to the south-east, apparently the same zone of schistosity spreads out to a width of several hundred feet, and the ore occurrence has so far been found more patchy and uncertain.

As might be expected, the country rock near the veins, even



Digitized by Google

when most clearly defined, has often a more or less schistose structure, which disappears on going a few feet or yards away.

As already mentioned, the veins or ore formations have a general north-west and south-east course or strike. The general underlie is slightly to the west, say from 10° to 20° from the vertical, although in some cases the veins have been found vertical or underlying slightly to the east.

The ore appears to occur in shoots, and the general impression of the mine managers is that the shoots have a pitch to the south, although this will be easier to trace when the workings are more advanced.

The surface or decomposed ore, in which the gold is free, was noticed in some cases as deep as the 200-ft. level; in other cases the ore was quite unaltered, and pyritic at 100 ft. Although specks of free gold are occasionally seen in the pyritic ore, the gold is to a great extent not free. As an experiment, the author took a small piece showing a considerable amount of pyrites and visible telluride, and doubtless assaying very many ounces to the ton, and ground it up and washed it, with the result that with every care not a "colour" of gold could be seen.

The writer did not learn if the exact composition of the tellurides found in the mines has been determined. Three varieties were noticed, the commonest being a brilliant white (sylvanite ?), a brassy yellow being also not uncommon, and in some mines a waxy blackish kind was also noticed. As a rule they are so finely divided as not to be distinguishable by the eye, although spots and splashes of some size are not at all uncommon in the stopes, and sometimes the showing of large splashes across a considerable width is quite wonderful. The tellurides go right through and permeate the mass of the ore, like the pyrites, and are not confined to cracks, faces, or cavities. Their occurrence in this way in strong masterly formations appears to be a good argument for their continuation in depth, inasmuch as it appears to have formed an element or feature of the mineralisation of the veins themselves, and not to be due to subsequent or secondary action, which might prove to be more local or patchy in character.

*Ore Treatment.*—The free surface ores and the undecomposed telluride ores naturally call for different methods of treatment to extract the gold. The free surface ores are, as a rule, crushed wet in stamp mills and amalgamated in the usual way.

A new up-to-date 40-stamp mill with cyanide works was just being completed at the Lake View Mine, and will doubtless do good work in the free ores. This mine also has an old 20-stamp

Digitized by Google

mill and another cyanide works, which had been treating the old tailings for some months, and extracting about an ounce of gold per ton from them.

The Great Boulder Mine has 30 stamps running on free ore, but no cyanide works, the tailings being saved for future treatment.

One or two of the other mines have little mills with Howland pulverisers, which are said to be answering well on the soft ore which is being crushed, and to be giving good amalgamating results. Here also the tailings are being kept for future treatment.

At two of the large mines dry crushing has been adopted for the surface ores, and considerable difficulty has been caused by the clayey nature of the ore, which impeded crushing and screening.

Several of the mines now opening out exceedingly well have no mills at all, but are having crushings made at a public battery, or are shipping parcels of telluride ore to the new smelting works at Adelaide or New South Wales.

It was locally reported that several of the Companies were having tests made to determine the best way of treating the telluride ore on the spot, and the general idea appeared to be that a light roast with subsequent cyaniding, followed perhaps by amalgamation to extract any coarse gold, would give good results. This treatment, if adopted, would seem to indicate dry crushing with both the free and the telluride ores; the treatment of the slimes by cyanide will be an important question, and the successful results which have been attained during the last year or two in Johannesberg in doing this should be of assistance here.

At present a considerable amount of telluride ore, of an ordinary value of from 3½ to 4½ oz. of gold per ton, is being sent to the smelting works at Adelaide or New South Wales, but as the charges for transport and treatment are said to be over £5 per ton, it would seem better policy to treat this class of ore eventually on the mines.

*Water.*—The rainfall of the district being very slight (somewhere between 4 in. and 8 in. a year), great scarcity of water for milling purposes was anticipated some years ago; but, contrary to expectation, a sufficient supply for present operations is being obtained from the mines and from Hannan's Lake, and no serious complaints were heard of failure to obtain a supply. Sometimes one mine buys from another, paying about 5*s.* per 1,000 gallons, but, one way or another, so far it has been possible, with care and foresight, to arrange for requirements. The water is



Digitized by Google

settled and used over and over again, and the actual loss is said to amount to from 200 to 400 gallons per ton of ore.

The water is all very salt, but this property is said not to hinder the amalgamation of the gold.

At the time the mines were visited water was running to waste at one or two of the mines having no mill, which indicates that no real scarcity existed.

If in the future more water is required than the local sources can supply, it is safe to say the richness of the mines, and the large population they will attract, will ensure one or other of the schemes for getting a further supply being put into operation. The water for drinking and household purposes is partly obtained from tanks which catch the rainfall from the roofs, but also largely from shafts and wells, and the water from the latter sources has all to be condensed to remove the salts. The mining companies have their own condensers, and give their workmen an allowance of 2 gallons a day each.

In the town of Kalgoorli and its neighbourhood condensed water is sold at the rate of 12*s.* to 14*s.* per 100 gallons delivered, and as fuel (wood) is the principal item of cost in producing it, it appears likely to continue costly so long as it is derived from present sources.

The Government of Western Australia have a scheme for pumping water from near the coast up to Coolgardie and Kalgoorli, at an estimated cost of somewhere between 2½ and 3 millions sterling. There seemed, however, to be a feeling that this scheme erred on the side of being too large, and that some less costly source of supply for Kalgoorli might be possible. On this point the writer has no knowledge, but a feature of the case that seems to stand out very clearly is that taking an individual consumption of only two gallons per day of purchased water, each person is at present paying £4 7*s.* 6*d.* per annum for a very sparing supply, and the population will soon reach a point—if it has not already done so—when this or a smaller charge per head, would ensure an abundant supply, paying interest and redemption on the capital necessary to carry out a good scheme.

*Prospects of the Mines.*—Developing and equipping the mines is at present the order of the day, but as before mentioned only surface ores are as yet being treated on the spot. The developments of the mines, however, have of late been so satisfactory, both in proving the lateral extensions of the ore bodies, as also in finding them going down of undiminished value at all the deepest points so far touched (300 ft.), that it will doubtless not be long

Digitized by Google

before large plants will be in successful operation on the telluride ores.

As a general thing in the rich mines several parallel veins are being worked, for instance, in the Ivanhoe four, in the Great Boulder four, in the Lake View three, and so on, and an important feature of the present state of development of these mines is that, speaking generally, the workings have not reached the lateral limits of the ore bodies, but ends are being driven in rich virgin ground, in some mines quite a number of such ends, so that the value and possibilities of the properties are being daily added to.

One mine, the Great Boulder, being early in erecting stamps, and having a very good grade of ore, paid £160,000 in dividends (equal to 100 per cent. on the issued capital of the Company) in 1896. This was done with 20 stamps, working on ore which milled 3 oz. 6 dwt. of gold per ton worth £4 per oz., irrespective of what is left in the tailings. They have now 30 stamps running on this mine, and the recent returns have been at the rate of about 2¾ oz. per ton in the mill.

The Lake View Mine, until lately owned by an Adelaide company, has also paid dividends, but since its purchase by the English company until quite recently, the profits very wisely have been devoted to energetically developing and equipping the mine. Whilst writing these notes (October, 1897) this Company has declared a dividend of 10*s.* per share, amounting to £125,000, which is a foretaste of what is to come. The Ivanhoe Mine, now being purchased by an English company, has also been paying dividends for some time with 20 stamps; and as the other rich mines get developed and equipped they should follow suit, and become large dividend payers.

As mentioned before it looks at present as if there were about eight mines which were going to be very large and profitable producers, and about an equal or slightly larger number of smaller and less productive mines which look like possible dividend payers, and some of them may very likely pay fair dividends.

All the good mines appear to have a period of expansion in front of them, which will probably extend over several years.

*Output of Gold.*—The production of the Kalgoorli mines has lately been going up by leaps and bounds, and owing to the returns from ore shipped to smelters not coming in for some little time, it is probably rather difficult to give exact up-to-date figures.

According to the summary published in the *Kalgoorli Western Argus*, based on the statistics compiled by the Kalgoorli Chamber

Digitized by Google

of Mines, the figures for the quarter ending September 30th, 1897, are as follows:—

| 1897. | Tons treated. | Total yield. | Yield per ton. |
|---|---|---|---|
| July ..... | 8,654 | 19,949 oz. | 2 oz. 6 dwt. 2 gr. |
| August ..... | 8,758 | 20,435 „ | 2 „ 6 „ 16 „ |
| September.... | 9,285 | 25,896 „ | 2 „ 11 „ 20 „ |

The Kalgoorli gold is of unusual purity, averaging a little over £4 per oz.

No doubt by the time this paper is read the figures will show a further increase, and the conditions at the mines point to a very large increase spread over the next 18 months or two years, as the plants for treating the telluride ores on the spot get to work at the different mines.

The outlook at the mines justifies the expectation that the production may then have grown to two or three times its present amount.

For the sake of comparison with other prominent Australian gold mining centres, the following figures are taken from various Government reports:—

| | Oz. of gold. | Value per oz. | Dividends distributed by gold mining companies in 1896. |
|---|---|---|---|
| Ballarat, Victoria, monthly average for 1896..... | 13,359 | £4 | £75,266 |
| Sandhurst (Bendigo), Victoria, monthly average for 1896 ..... | 15,995 | £4 | £177,920 |
| Charters Towers, Queensland, monthly average for 1896 ..... | 19,511 | £3·6 | £254,616 |

*Some General Notes.*—"Dry blowing," or shaking the surface dirt and gravels in small cradles mounted on four flexible legs, is still being carried on by several hundreds of men in the neighbourhood of the town of Kalgoorli, and contributes considerably to the dust of the place on a windy day. The men engaged on this work are generally supposed to be about making their keep or "tucker." It is curious that this alluvial deposit is about 3 miles distant over flat country from the rich mines, and no nearer alluvial deposit has yet been found. Miners are earning about 15*s.* per day when working in the mines, and labourers a little less. Judging by current report, and the number of workmen seen lounging about the streets of Kalgoorli, the supply of labourers largely exceeds the demand.

Digitized by Google

The town of Kalgoorli is very much like other new mining towns. The buildings are principally of corrugated iron, with some brick ones springing up here and there as confidence and money increases.

Town property was already commanding considerable prices, £5,000 being asked and paid for well situated lots with 66 ft. frontage on the main street.

As a novel feature in laying out the streets, it may be mentioned that the side walks are being made of extra width, the outer portion being for the use of bicycles, which are a very favourite means of locomotion, the country being flat, and the camel paths by the side of the main roads making a fair track. Horse keep is also very expensive.

As regards the weather, the writer can only speak with personal knowledge of the winter months of July, August, and September, when it was, as might be expected from the latitude (about 31° South) and height above the sea (1,240 ft.), exceedingly pleasant. As a rule, it was sufficiently cool to make an overcoat welcome when driving about. In the summer, great heat is doubtless experienced, but it is dry, and is said not to be more trying than many parts of New South Wales and Queensland. The dust and flies are described, however, as being terribly troublesome at times.

The climate itself appears to be fairly healthy, although typhoid fever is a terrible scourge in the hotter seasons of the year, doubtless owing to bad sanitary arrangements; the town of Perth on the coast, which used to be pretty free from typhoid, is now suffering a great deal owing to its sanitary arrangements not having kept pace with its growth of population.

Speaking generally of Western Australia, the Government appears to have been very energetic in pushing on the construction of railways; many people, particularly on the coast, seem to think that too much has been undertaken, but this criticism appears hardly justified, and without being able to say anything of the details of the expenditure, the policy of vigorously opening up the country appears to be a very sound one.

*General Impressions.*—The most prominent impressions remaining, after visiting most of the principal mines in the centre of the field, may be summarised as follows:—

1. The great richness, width, and length of the ore formations as far as developments go.
2. Their healthy appearance in the bottom workings (300 ft.),

Digitized by Google

which, taken together with the long continuous runs of ore in the upper workings, give an impression of lasting.

3. The great capacity for increasing the scale of working and output possessed by the rich mines if this promise of lasting is borne out.
4. The water supply, although scanty, is not so scanty as to prove a bar to very successful working, and managers appear confident of being able to extend their scale of operations. Should additional supply be needed, the large and growing local population, and the richness of the mines, should ensure its being forthcoming.

In conclusion, the writer would like to take this opportunity of thanking the many directors and managers for the permission so kindly accorded, which enabled him to visit their very interesting mines.

---

## DISCUSSION.

**Mr. J. H. Collins** said that the details given were scarcely sufficient to enable the paper to be discussed fully. He thought, however, that the author indicated pretty clearly that the lodes in question were not what were commonly known as true fissure veins, and no doubt if they were able to see the deposits for themselves, this explanation of their character would be accepted. With regard to the nature of the rock before alteration, the author did not state any opinion at all, and he did not think that the members could agree with the views expressed by Mr. Card. The particulars given in the paper tended to show that it was very difficult to account for all the carbonic acid and the carbonates if the rocks were altered igneous rocks. This might be so, but if it were the case, there ought to be some indication of the origin of so much carbonic material. As to the mineralisation, it appeared to be, as was almost always the case, the introduction of metallic sulphides, because in the analysis given in the paper of the "country" they were not present to any great extent. It was unfortunate that, although the ore was said to be a characteristic specimen, and although the mines were turning out many thousands of tons with an average of 2 oz. of gold to the ton, the specimen examined only showed a trace.

**Mr. Joseph Garland,** who was not able to be present, sent a

Digitized by Google

communication dealing with the paper. He wrote: That it might be taken as an established fact that the ore did occur in shoots. It was so in the Great Boulder Mine, where a correspondingly rich ore was found a good deal farther south in the 200 ft. than in the 100 ft. level. As to the formation, he did not regard it as an easy matter to accurately define an "ore formation" in the sense used by mining men in Western Australia, but the author's definition was, he thought, the best he had seen. It was certainly true, as pointed out by the author, that the formation or zone of schistosity was not generally a productive zone throughout, but the gold rather occurred in distinct bands or leaders, and, as the author put it, was patchy and uncertain. The bulk of the formation was also either barren or of too low grade to work. The author called attention to the very noteworthy fact that in the principal mines a number of parallel veins were found, and cross-cutting east or west was almost certain to result in the discovery of other lodes. This had been the case with the Great Boulder. The author quoted this mine as having four parallel veins; it had at least four, but it was not certain they were all distinct lodes. Some of them were without doubt bifurcations and enclosed "horses" or large masses of country rock which served to increase the productiveness of the mine. He congratulated the author on his efforts to throw light on the question of the true character of the country rock. So much was spoken as to the "decomposed country rock," described by the author as schistose country rock, of "diorite country," of the "oxydised zone," and of the "unoxydised zone," that one could not but be gratified to find the matter treated from a scientific standpoint with geological definitions and chemical analyses. He concluded by expressing his personal indebtedness to the author for his comprehensive and carefully prepared paper.

**Mr. Samuel Gifford** observed that the author considered the country rock to be of a more or less granitic character. He had been over the same ground on many occasions and confessed that that was not the conclusion to which he had come. He had noticed in traversing the district in many places bands of dioritic and schistose rock, but he did not see anything of a granitic character. There were many places in Western Australia, not very far from the Kalgoorli district, where the granite was seen very clearly, but there was evidently a very great difference between the granite as seen in those places, and the rock which was called granitic in the Kalgoorli district.

**Mr. Walter McDermott** agreed with Mr. Gifford that from what they had heard the rock appeared to have been originally

Digitized by Google

dioritic rather than granitic. The author did not say much in the paper relating to the occurrence in many places of large quantities of chlorite and talc through the mass, which would seem rather to point to the origin from diorite, and in many cases there were bands of very well marked chloritic schist. The amount of carbonic acid present was also opposed to the idea of granitic origin. The rocks varied very much in different parts of the field, often changing into very different forms.

**Mr. T. Rickard** thought that the description of the rock was left by the author in a state of obscurity. From the author's description it corresponded very much with the rock series of a large portion of Western Ontario. The great point in the paper was the author's opinion as to the permanence of the deposits. It was a very important feature of the lodes that tellurides seemed to form a permanent constituent of the large veins, and the fact that tellurides were found underneath the zone of oxidation augured well for their permanence in depth. The author did not give any very definite opinion as to the proper way of dealing with the ores, which, until about six months ago, was involved in a great deal of obscurity. The ores were most refractory and nobody seemed to know how to deal with them. It appeared now to be settled that the ore was amenable to cyanide treatment with the aid of previous calcination, and in some cases, where coarse gold was present, it would be necessary to follow with amalgamation. Mr. Frecheville, however, appeared to prove to his own satisfaction that there was no coarse gold when the zone of oxidation had been passed. If such was the case, the operation would simply be that of crushing and chlorination.

**Mr. Lockhart** drew attention to the small quantity of gold contained in the characteristic specimen of Great Boulder ore which the author had had assayed. He thought that that could hardly be said to be a typical representative specimen.

**Mr. Walter Smith** thought that the paper was the fairest account of the Kalgoorli mines he had seen, and it was to be regretted that they had no specimens of the ore from that district before them that evening. Although he had seen many analyses of ore and country rock from Kalgoorli, he had never come across one which contained only traces of gold; it usually contained a few dwt. In the analysis given the amount of silver present seemed to be larger than usual. He thought some mention should have been made of the Hannans Brownhill Mine, the ore from which was very peculiar; it looked like an extra well burnt brick with bands of white material which appeared to be

Digitized by Google

a sort of kaolin. Mention had been made about treating the ore with cyanide before amalgamation; he should have thought it would have been better to have extracted the coarse gold by amalgamation first, and cyanide afterwards.

**Mr. S. Gifford** remarked that the general practice up to the present time was to amalgamate first; no cases to the contrary had come under his notice.

**Mr. McDermott** said that, as regards the treatment of the ore, once it was crushed dry for roasting the natural process would be to cyanide first, and any gold that escaped could be easily saved by a very simple amalgamation process. In crushing wet, amalgamation was naturally effected in the crushing operation, but the process was reversed in crushing dry and roasting. The condition of the ore would be more favourable for the cyanide treatment direct as a pulp.

**Mr. S. Gifford** observed that he understood that in the Hannans Brownhill Mine, where roasting took place, that there was a certain amount of amalgamation prior to treatment by cyanide.

**Mr. McDermott** stated, in reply, that that process had been given up. It was used in the old Brownhill Mill, which he understood was not very successful.

**The President** said that personally he did not quite agree with the opinion expressed by the author as to the character of the rock and the ore filling. He had been over the field carefully, and considered that the specimens were no doubt representative of the particular point from which they were taken, but they were very far from being representative of the general country rock of the Kalgoorli district, or the ore, and the analysis bore this opinion out. In the first instance, the ore was very pyritic, containing no less than 10 per cent. of pyrites. The analysis, however, was not quite complete, because the combined water, or water of constitution, which was generally present in ore of this kind, had not been estimated, and that, no doubt, accounted for the analysis not coming out as might have been expected. As had been remarked, the fact that there were only traces of gold while the sample contained 4 dwt. 21 gr. of silver, indicated that it was far from being a typical specimen of the ore. It was supposed to be a typical specimen of the average Great Boulder ore, but if this sample was characteristic of anything at all it was as being an exceptional sample. He agreed with Mr. Collins that the analysis of the country rock required a good deal of explanation, and would require to be supplemented by a larger series of analyses of other local rocks. It was quite possible that small specimens of

Digitized by Google

the country rock might be met with which contained large quantities of carbonate of lime.

He could not accept the author's statement that the rock was granitic. The other view, that it was porphyry, might be correct, but the character of the rock was very peculiar, and the amount of talcose material present so great that a good deal of further information was required before a final opinion could be formed.

The author had not brought out quite as clearly as he might have done that the nature of the deposits varied considerably. There were three different types in the Kalgoorli district; there were regular quartz lodes, found in the north-west, and he believed also in the east; again, there was another vein which was still a distinct lode, although not so quartzitic in character; and, lastly, there were those particular formations about which everybody seemed to have a theory, but none appeared to know anything very definite.

He would have been glad to have had some information of recent date as to the condition of the field to the north of the township of Kalgoorli, where a good deal of work was being done, but where no traces of this class of formation had as yet been met with. Many of the surface "shows" in that district were very rich—4 to 5 oz. had been found in samples—but, as far as he was aware, up to the present no very rich lode had been discovered. Many of the veins were large in size, and some of them very talcose in character, carrying thin veins or threads of quartz, and if these threads were carefully picked out a reasonable amount of gold could be obtained, but, if a sample were taken across the whole lode, the gold rarely amounted to more than a few dwt. The mass was certainly not payable, and he would have been glad to hear if anything had been found of a more encouraging nature since his visit, which was over a year ago. Reverting to the analyses, it struck him as very curious that there should be so much silver; as a rule the gold from the Kalgoorli district was very pure, and contained a much smaller proportion of silver than this analysis would lead one to believe.

The statement that the ore appeared to run in shoots was, he believed, accurate. There was no doubt whatever that in most of the mines the ore did run in shoots, and some of them were very large and extended for long distances.

The methods of treating the ore were, of course, on their trial. It had certainly been a general rule to treat the ore by cyaniding first, but when an ore containing telluride was roasted the result was to cause the gold to agglomerate into small beads or globules,

Digitized by Google

sometimes rather spongy in character. These beads, although small, were solid, and not easily dissolved by cyanide. If they amalgamated in the first instance there was a risk of losing all the fine gold in the slimes, whereas if the ore were crushed dry and then cyanided there was not so much slime created, and the fine gold could easily be dissolved and recovered, while the coarse gold could be afterwards got out by pan amalgamation very successfully. Many experiments had been made in that direction of late, and the results had been very satisfactory.

An interesting point in the paper dealt with the water question. The members had no doubt heard of the scheme which the Government of Western Australia were proposing to carry out to pump water from the coast ranges at an enormous cost. Mr. Frecheville remarked that the rate which was now being paid for water—£4 7*s.* 6*d.* per annum per head, for two gallons a day—would pay a sufficient interest and form a redemption fund on the capital necessary to carry out such a scheme.

The great advance which had taken place in the yield of gold was shown very clearly in the figures given. In July, 1897, the yield was 19,950 oz., while in September it reached 25,900, and in his opinion that was only a beginning. An enormous amount of gold would be produced there, and including the Murchison field, which was also rapidly coming to the front, there was no doubt that before many years the output of gold from Western Australia would be something beyond anything that could be imagined at present.

**Mr. McDermott** said that with regard to the samples containing so little gold too much weight had been attached to the existence of a few ounces of gold, more or less, but this would not affect in any way the chemical composition of the ore. It was well known that a typical sample of vein rock could be taken from a payable gold mine and yet no gold obtained from that sample, and it would be perfectly fair to take a sample of quartz from a vein for analysis, and the absence of gold in it would not prevent it being a typical sample of the matrix of the vein. The absence of gold was merely accidental, and it was quite certain that the author would never have taken a sample as typical of the ore in the vein except from a part which he knew to be ore bearing or within the ore-bearing zone. They all knew that the occurrence of free gold and tellurides was uncertain, and it was therefore quite possible to take a sample which was typical of the character of the rock chemically, and yet have no gold whatever in it. The curious point perhaps was the percentage of sulphur.

Digitized by Google

There was also 4·8 per cent. of iron as pyrites present in the ore, and 0·19 per cent. in the rock, and this would seem to indicate not that the ore was not rich in gold, but that the value was in free gold or in tellurides irregularly scattered through the rock. The sample which was shown at the reading of a paper by Mr. Woodward* on the Hannans field clearly showed the scattered form in which tellurides occurred, as well as the concentration in the free gold, and he considered the analysis was useful showing as it did the great variations which occurred within small distances. It would require a great many samples from a number of places to draw very accurate conclusions. He certainly thought it was unfair that the absence of gold in the sample should prevent it from being represented to be a typical sample at the particular place from which it was taken.

**Mr. S. Gifford** said that he agreed with Mr. McDermott's remarks. He had found on several occasions that a stone which he had taken as typical contained no gold, while another, equally typical, contained a good deal. This had occurred within comparatively short distances.

**Professor Huntington** remarked that the question of dry crushing was assuming considerable importance in that particular district. The nature of the ore appeared to point to dry crushing with the use of Krupp mills on a scale such as had never before been seen. Dry crushing had up to the present been looked upon rather unfavourably for the treatment of gold ores, but the Kalgoorli field seemed to be likely to bring about a revolution in the treatment of ores by dry crushing.

The following was the next paper read.

* Page 14.

Digitized by Google

# "Notes on Shaft Sinking."

By W. Teague, M.Inst.M.M.

The subject of shaft sinking is one of vital importance in connection with mining generally; in fact, a subject that no single individual can fully do justice to, unless he has had considerable experience both at home and abroad, and in various kinds of mining, metalliferous and otherwise.

Particular attention should be given to the fact that the style of shaft and drawing arrangements that would be most suitable for one mine or district would not necessarily be applicable to another. In fact there are mines with lodes running through them at various angles where it would not be economical to have the same kind of shaft arrangement for drawing and pumping on the same property. In a case of this sort it is most essential that the manager should have had considerable experience.

The subject, therefore, is of such importance to any property that it is never wise to arrive at a hasty conclusion respecting the size and shape of any permanent shaft to be sunk.

Much has been said in favour of the winding machinery in South Wales, and justly so, where the output amounts to thousands of tons per day from a single shaft with the most modern hauling appliances; but the conditions are very different in a coal mine where the beds of coal are flat and the quantity of the output is the sole consideration. This cannot be compared with a metalliferous mine. Were we to wind thousands of tons daily from our mines, what should we do with the tin? That is, of course, supposing we could find such large quantities of payable ore.

There has been a good deal of discussion lately as regards the size and shape of shafts, and whether it is more desirable to sink a vertical shaft or follow the lead of the lode; these are subjects which we may well consider and discuss.

Digitized by Google

Firstly, the writer is in favour of a round shaft if a vertical one is desirable, which in many properties would be the case—especially where there are a number of lodes with different underlies forming junctions at given points; for instance, one lode might underlie north, and another lode underlie south; and again, two lodes might have different underlies in the same direction, and as it were entwine. Under these conditions a vertical shaft would be preferable from the fact that it would give less trouble.

The principal advantages in favour of a round shaft are these, viz.:—

*Safety.*—Because it forms a complete arc, and is, therefore, safer under any conditions, being, as it were, self-supporting, and particularly so where there is troublesome ground to be dealt with.

*Speed.*—It can be sunk with less trouble, and, therefore, with greater speed, because the difficulty of keeping out the corners, which always occurs in a rectangular shaft, is avoided; and in order to overcome this difficulty there will be considerable loss of time which will entail extra expense.

*Brick Lining.*—In a round shaft brick lining or tubing can always be successfully carried out. It might not be out of place at this point to mention that very great care should be taken to provide the necessary vent pipes with proper arrangements for stopping, and which should on no account be closed until the brickwork has become thoroughly set. Cast-iron sockets should be inserted in the brickwork at suitable distances for fixing the dividing timbers, &c.

*Rock Drills.*—Rock drills could be used in a circular shaft to great advantage, though the author's time at present will not allow of entering into details.

With regard to the ventilation of a shaft, the most effective method is to inject air, as the natural tendency of the fumes is to rise, which should certainly be encouraged rather than to attempt to draw them back by exhaustion. This is directly opposed to the ventilation of a level or tunnel, where the only effective method is to exhaust the vitiated air by means of pipes.

The size of a shaft would of course depend on circumstances, but let us assume that a shaft 14 ft. 6 in. in diameter will be the most suitable size: this will admit of two rectangular compartments, 6 ft. by 10 ft. and 9 ft. by 4 ft. The 6 ft. by 10 ft. compartment would admit of 20 in. pitwork capable of pumping 1,080 gallons of water per minute with ten 8 ft. strokes; there would also be ample space for a good ladder-way. In the 9 ft. by 4 ft. compartment, two 3 ft. skips could be worked, each holding about

Digitized by Google

*Transactions of the Institution of Mining and Metallurgy, vol. vi*, 1897–8.
*Plate XI, to face page* 160.

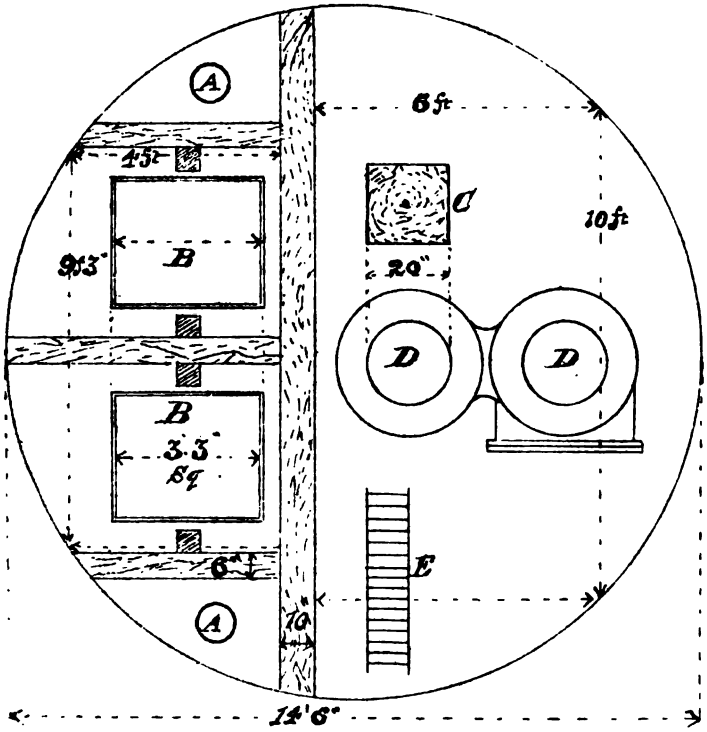


A. Air pipes. B. Skips. C. Main road. D. Pit work.
E. Ladder-way.

Digitized by Google

Digitized by Google

3 tons; and when fitted with double-deck cages, would be capable of changing over 36 men every turn. The author has had no experience of self-dumping skips. There should be no necessity for providing space in the shaft for a capstan. The author has, however, provided for two 1 ft. air or ventilating pipes in winding compartment.

A shaft of this description would be found equal to the requirements of any metalliferous mine, even when it is found desirable to pump water, and to raise the ores through the same shaft. There would be no difficulty in sending the necessary workmen up and down, and raising 400 tons of stuff in the 24 hours, though 200 tons a day is quite sufficient to raise from any one shaft in a metalliferous mine in order to secure economical working underground. In a case where pumping machinery is not required, a shaft of from 7 ft. to 8 ft. in diameter would be quite large enough —this should be fitted with a single 3 ft. skip, and ladder-way. The general opinion is in favour of a balance skip, but the writer is strongly of opinion that where a large output is not necessary, that it is far more economical to work one skip equal to carrying 3 tons of stuff, than it is to work two skips carrying 30 cwt. each. There can be no doubt that it is much easier and economical to fill and discharge one skip of 3 tons than two skips of 30 cwt. Provided that there is sufficient power in the winding engine, the economy of double winding over single is more imaginary than real; because while the skip is being dumped, lowered down by brake, and refilled, the boilers have generated sufficient steam to raise the full skip. The cost of maintaining two roads instead of one is also worth consideration.

With regard to inclined shafts, the same principles would apply to either the double or single skip-roads. If one had to sink a shaft on a lode underlying say, 45 degrees, an inclined shaft should certainly be put down. Many of the objections that we hear of, as to the economy and efficiency of the underlie shaft, are due to the fact that this most important subject has not received the attention that it deserves. In considering the relative cost and speed of sinking a shaft on the underlie, as against a vertical shaft, one must not lose sight of the considerable cost and time taken in driving long cross-cuts to each level, and also the extra expense in laying down tramroads, which of course must apply to all vertical shafts. And again, what would be the amount of coal necessary, in order to remove 200 tons of stuff daily a short distance on our railways? Why, practically nothing. Then it must be very obvious that the nearer we get to our railway system the



Digitized by Google

better; a weight can never be so easily drawn as when it is on wheels. Anyone might ask how is it that we can't show such good results in working with our underlie shafts as are done with the vertical? The reason for that is very plain. The underlie shafts in this district have never been properly laid down, and sufficient care taken with them from the beginning; and we are perhaps in the habit of looking on them in the manner of makeshifts. For this, no doubt, we blame our forefathers to a very great extent; but then we are not quite blameless in this matter. In the case of vertical shafts which have been sunk in recent times, and are now being sunk, no expense has been spared in making them as nearly perfect as possible, and unfortunately we have hardly a really well-laid underlie shaft in the district with which we can compare them; we know that they hold their own, and do excellent work abroad.

---

## DISCUSSION.

**Mr. W. L. Wildly** thought that, in making his calculations, the author had overlooked the fact that with a single 3-ton skip there was no equivalent counterbalance in the shape of cages going down. It also seemed to him that to talk of the boilers generating sufficient steam to lift the skip a second time betokened an unmechanical mind. With regard to the merits of round or square shafts, it appeared to him that in foreign mines, where timbering was used, there was no advantage in a round shaft.

**Mr. Joseph Garland** wrote that he did not agree with the author's opinion that it was more economical to hoist with a single 3-ton skip than with two skips carrying 1½ tons each. The author seemed to lose sight of the fact that every lb. of dead weight had to be lifted at the expense of coal consumed, when he stated that while the single skip was being dumped, lowered, &c., the boilers had time to generate steam to raise the full skip.

**Mr. H. G. V. Adler** said that on the Rand, owing to the nature of the ground, round shafts should be sunk. The ground required very little timbering. In the Langlaagte Royal the shaft was sunk to a depth of 640 ft., the average per month being 120 ft.; the record was 132 ft. of sinking in one month. The work was done with three rock drills and a small winding engine, and no

Digitized by Google

timber was used till a depth of 640 ft. was reached. There were two skip ways, two cage ways, a man way, and a pump way. The shaft was 18 ft. in diameter, and he thought it was sunk quicker and at less cost than the rectangular shafts sunk by the Rose Deep Mine, which were 14 × 6. The description of the work was published in the *Mining Journal*, in 1895.

**Mr. Rickard** thought that the remarks of the last speaker were very interesting. He had often wondered why rectangular shafts were put down on the Rand and so much timber used in them, seeing that the rocks were so alike in character, and seeing that the ground was not of a loose nature. The timbering of the shafts cost a great deal in time, and was by no means inexpensive in regard to the material employed. He thought those engaged in opening up mines to a great depth would do well to pay attention to Mr. Adler's remarks on the subject.

With regard to the paper, it was simply one applicable to a particular district, and laid no claim to being a treatise on general shaft sinking. For instance, with reference to the advantage of sinking underlie or vertical shafts, it would depend upon the nature of the walls, and whether there was a good deal of water or not. If there was a large quantity of water, and economy was desired, a vertical shaft was necessary.

As to the advantage of round shafts as compared with square ones, it seemed to him to depend entirely upon the particular conditions under which the work was started. It could not be said off-hand which method was the better, and the problem had to be decided by the local conditions.

**Mr. Lockhart** said that it might perhaps be as well if the author were asked to supplement his paper on one or two points. In the paragraph headed "Safety," it was stated that the advantage of a round shaft was that it formed a complete arc, and was, therefore, self-supporting. He supposed the author meant to convey that it was a complete circle. A round hole was not necessarily self supporting, although in the case of a brick shaft it would be so to a certain extent. The author asserted that a round shaft was best in troublesome ground, but it seemed to him that in ground of that description a shaft was no better for being round; the sides would fall in just as much in a round hole as in a square one.

**Mr. S. Gifford** said there was one kind of incline shaft (which had not been mentioned in the paper) that was sometimes used, and that was one which followed the line of the lode, and also followed the incline of the shoots. He thought a paper



Digitized by Google

dealing with shaft sinking generally, might have mentioned that an incline shaft need not necessarily follow a straight line in the incline of the vein, but might lie along the line of the vein, following the dip of the shoots.

The following paper was read.

## "On Diamond Drilling in the Transvaal."

By W. WYBERGH, Assoc. Inst. M.M.

THE following notes embrace the records of some twenty boreholes put down in the Transvaal during the past two years, for the most part under the author's supervision. The conditions under which the work was done were varied very much, and the speed and cost of drilling almost equally so. The records kept also vary somewhat in completeness, and in the case of some of the earlier boreholes leave much to be desired. A satisfactory form of record has now been evolved, and at the present time the data obtained in previous work afford very material assistance in making estimates for similar undertakings.

As regards the cost of work, it should be stated that almost the whole of the boring was done by contract.

During the greater part of the period under review there was so much activity in drilling operations in this country that the contractors were practically able to fix their own prices, and at one time almost made a favour of undertaking work at all. This is now a thing of the past; a number of drills have been imported by private firms for their own use, and, with plenty of skilled men available, it is usually much better for a mining company to do its own drilling. It should also be mentioned that the cost of carbons, by far the most important item of expense, has at times been very high. It has touched £13 per carat, and for a long time was in the neighbourhood of £10. The present price is about £7, which must still be considered very high.

The details of 19 of these boreholes have been tabulated so as to afford a ready means of comparison. The remaining boreholes were put down with a small hand drill.

The objects aimed at in these boreholes were of course widely different; thus, in some cases, boreholes were put down through overlying unconformable beds or sheets of igneous rock, in order to test the underlying formation and prospect for reefs; in other

Digitized by Google

cases the work was undertaken because the enormous thickness of surface soil or detritus made it impossible to trace the extension of known reefs in any other way. In some cases, boreholes were put down simply to determine the dip of the formation or to ascertain at what depth below the surface the reefs would be met with, when faulting was suspected. This paper, however, is not concerned with the objects or results of boring, but rather with the technical details of the work.

From this point of view the three objects are low cost, speed, and the saving of the utmost possible amount of the core. The relative importance of these objects varies in different cases; thus, for instance, it is of small importance to save core when boring through an overlying sheet of igneous rock.

So far as cost is concerned, the main factor, as mentioned above, is the quantity of carbons used and their price, or what amounts in some cases to the same thing, the price per foot demanded by the contractors.

The quantity of carbons used is unfortunately, in most cases, unobtainable, as the majority of the boreholes have been put down by contract.

Borehole No. 19, however, was put down by day labour under the author's immediate supervision, and the quantity of carbons used can be given. The ground bored through was quartzite, in some cases hard and broken, in others excellent drilling ground. On the whole it may be taken as somewhat more difficult ground than the average. The carbons used amounted to 0·0692 carat per foot over 1,328 ft. $2\frac{1}{2}$ in. Fuller particulars of this borehole are given below.

The quantity of carbons used varies very considerably. Much depends upon having a thoroughly competent and trustworthy foreman, who thoroughly understands setting his bits. If the carbons are not well set, the greatest care in their use may be insufficient to prevent them being torn out of the bit. Conversely the best set bit may be ruined in an instant by carelessness, and hundreds of pounds worth of diamonds lost.

The contractor who put down borehole No. 17 stated that he lost £1,000 over the job, chiefly owing to the loss and breakage of carbons.

Broken ground is a frequent cause of the loss or breakage of carbons. The worst ground for the loss of carbons that the author has any experience of was a somewhat loose breccia of chert. The fragments rolled under the bit, and several carbons were lost or broken in the first 6 in. An attempt was made to

Digitized by Google

chop through it with a steel chopping bit, but the ground was so hard and the progress so slow that the borehole was abandoned.

Other things being equal, the larger the bit used, the greater is the consumption of carbons. Upon the size of the bit also depends the size of the carbons that it is desirable to use. As a general rule it may be stated that it is seldom advisable to buy carbons under 3 carats in weight, as, although smaller ones are required, there is always sure to be plenty of these, worn or broken down from larger ones.

Great care must be exercised in the purchase of carbons. They should not have any notable projecting points or edges, as such projections will be broken off at once when they are used. On the other hand, a carbon is sometimes badly shaped, because its quality is so tough that it would be impossible to break it into good shape without crushing it, and such carbons may be well worth buying. Good carbons frequently have a slight coppery tinge and a kind of gloss on the surface. It is, however, impossible to give any general rules for the purchase of carbons, though the cost of boring greatly depends upon making a good selection. Carbons that have been in use should always be obtained when possible.

It may not be amiss to note that care should be taken to see that what are bought for carbons really are what they purport to be, as bogus carbons are not unknown.

From 10 to 14 stones are set in each bit, according to the size, and from 18 to 30 carats.

After the consumption of carbons, the principal item in the cost is labour. From two to four white men have usually been employed, and about the same number of Kaffirs. The number varies according as two or three shifts are worked a day. In the Transvaal labour is costly. A drill foreman will get £35 to £40 per month, and the other white man from £15 to £25. Kaffirs receive about £4 per month and their keep.

The contract price, which of course includes labour, carbons, and coal, has varied from about 22*s*. 6*d*. per ft. to about 40*s*. The scale of payment varies according to the depth of the borehole. As a rule, the price is constant down to a depth of 1,000 ft., and after that 5*s*. per ft. is added for every 500 ft. more. The terms vary of course considerably, according to the expected nature of the ground. The average price for 14 boreholes, or 7,962 ft., was 33·38*s*. per ft. This includes, in some cases, small amounts for hire or depreciation of the drilling plant. The costs of borehole No. 19 are given separately.

Digitized by Google

The other items are water supply and superintendence. The cost of the water supply has varied from 2*s*. per ft. to about 11*s*., and depends entirely of course on local circumstances. In many cases the water has had to be carried in tanks on ox wagons for over a mile; while in one case, that of borehole No. 7, the water gravitated from a neighbouring shaft, and cost nothing. The quantity of the water used depends partly upon the size of the drill and partly on the nature of the ground. Thus in borehole No. 7, which was mostly in dolomite, more than half as much again was used as in borehole No. 8, though practically the same sized drill was employed.

The reason is that in ordinary cases, where the borehole is fairly watertight, and not intersected by fissures, the water used nearly all comes to the surface, and can be used over again, after allowing the bore-meal to settle. The dolomite, however, was full of cavities, and practically none of the water came to the surface. The quantity of the water required has varied from 1,300 to 3,200 gallons per day, and the average cost for 14 boreholes or 7,962 ft. has been 3·95*s*. per ft.

As regards superintendence, the author has invariably employed a "core-watcher," whose duty it is to be present at every drawing of the rods, and receive the core as it is drawn. He is entirely responsible for the safe custody of the core, and is required to keep a journal, and to keep account of the stores used, payments made to contractors, &c. The employment of such a man may perhaps be considered an extravagance, but the position is no sinecure, and in cases where the result of the boring is confidential, it is absolutely essential to have a trustworthy and responsible person on the ground. Cases have occurred in which large bribes have been offered to core-watchers to divulge information as to results.

The total cost has varied from 28·25*s*. per ft. to 51·87*s*., and the average for 14 boreholes or 7,962 ft. bored by contract has been 40·87*s*. per ft.

With regard to speed the principal factor apart from the depth is the nature of the rock, and rather its physical condition than its lithological composition. If the ground is broken or traversed by numerous quartz stringers, the core breaks up into small fragments and chokes the hole, necessitating frequent lifting of the rods. This causes great delay, especially at considerable depths. On the other hand, very hard and compact ground, such as chert or fine grained quartzite, drills very slowly. In the case of borehole No. 19, occasional bands of very compact quartzite were en-

Digitized by Google

countered in which the speed of actual drilling fell to 1 in. per hour. The most favourable kind of ground, other of course than alluvial soil, appears on the whole to be the ordinary coarse sandstone or quartzite of the Witwatersrand. The grains are of such dimensions that they are "footed out" of the matrix by the diamonds, whereas the compact quartzite or chert has to be actually worn away.

In borehole No. 1 a great average speed was attained in diabase but this was quite exceptional, and igneous rocks are very uncertain. In borehole No. 17 the composition of the rock was almost exactly similar, but progress was very slow, chiefly on account of the ground being much broken. In the tabular statement the ground drilled per hour in solid formation includes both actual boring and lowering and lifting of rods, as sufficient data were not obtainable as to the speed of actual boring alone. The depth of the borehole has therefore obviously a large influence on these figures.

It is important to have the core-barrel of sufficient length especially when drilling in good ground, in order to avoid the necessity of frequent lifting on account of the core-barrel getting full. In this connection it may be pointed out that the tabular statement shows an obvious, if not a strictly proportional, connection between the rate of boring and the number of feet bored per lift. Another important thing is to set the carbons so as to give sufficient clearance to the bit. By this means the sticking of the rods, and the consequent necessity of widening, or "reaming" the hole is avoided. The clearance should not be less than $\frac{1}{16}$ in. all round.

The height of the derrick used has also a great influence upon the rate of progress. The derrick should not be less than 50 ft. high, so as to enable 40 ft. of rods to be unscrewed at a time. With rods of 2 in. diameter, or less, this is about the greatest length that can be conveniently handled, as greater lengths become inconveniently, when stacked, for want of rigidity. When using rods of a greater diameter a correspondingly greater length can be handled at a time, and the speed of lifting and lowering thereby increased. These large rods are generally used for the upper portions of a deep borehole, as the torsional strain upon the upper portion of the rods is very great when a considerable depth is attained.

Another point that should not be lost sight of is to have a sufficiently large area of brake surface on the lowering drum. It is not enough to have a sufficiently powerful brake. It must

Digitized by Google

IPARISON OF BOR

| lid formation. | | | | | | | Number of men employed. | | |
|---|---|---|---|---|---|---|---|---|---|
| illed our ling ng. | Depth bored per lift. | | nd drill. | Nominal H.P. boiler. | Water consumed daily. | Total coal consumed. Tons (2,000 lbs.) | Whites. | Natives. | No. of borehole. |
| | Ft. | | | | Gallons. | | | | |
| 29 | 5·36 | | N.. | 25? | 2,000 | 40 | 4 | 2 | 1 |
| 50 | .. | | N.. | 25? | 2,000 | .. | 4 | 2 | 2 |
| 34 | 2·80 | | P.. | 25 | 3,000 | 87 | 4 | 2 | 3 |
| 28 | .. | 2 | ss D | 12 | .. | 4 | 2 | 5 | 4 |
| 00 | 7·37 | 5 | .. | 12 | .. | 3 | 2 | 5 | 5 |
| 70 | 4·05 | 2 | on .. | .. | 1,300 | 39 | 3 | 6 | 6 |
| 60 | 3·70 | | B.. | 12 | 2,400 | 31·4 | 4 | 4 | 7 |
| 40 | .. | 4 | .. | 8 | 1,040 | .. | 3 | 4 | 8 |
| | .. | 10 | .. | 8 | 1,440 | .. | 3 | 4 | 9 |
| 50 | .. | 1 | .. | 8 | 1,440 | .. | 3 | 4 | 10 |
| 30 | 9·8 | 1 | .. | 8 | 1,040 | .. | 3 | 4 | 11 |
| | .. | | on .. | .. | 2 800 | 7·2 | 3 | 2 | 12 |
| | .. | | .. | .. | 2,800 | 11·4 | 3 | 2 | 13 |
| | 6·0 | | .. | .. | 2,800 | .. | 3 | 2 | 14 |
| 80 | 5·16 | | .. | .. | 2,800 | 9·3 | 3 | 3 | 15 |
| 20 | 8·87 | | .. ss .. | 16 14 | 3,000 | .. | 4 | 4 | 16 |
| 14 | 4·87 | | B.. | 12 | 3,250 | .. | 4 | 4 | 17 |
| 89 | 3·22 | 1 | .. | 8 | 1,200 | .. | 3 | 4 | 18 |
| 33 | 7·59 | | P.. | .. | .. | .. | 4 | 8 | 19 |

Digitized by Google

T OF E

No. 9

| illings per oct. | |
|---|---|
| 0·80 | |
| 2·50 | |
| 0·14 | |
| 4·74 | |
| 5·71 | |
| 4·20 | |
| 0·42 | |
| 7·51 | |

Digitized by Google

:T OF BORING OPERATIO

| No. 9. | | No. 10. | | o. 15. | | No. 16. | | No. 17. | |
|---|---|---|---|---|---|---|---|---|---|
| illings per oot. | Per cent. of total. | Shillings per foot. | Per cent. of total. | Shillings per foot. | Per cent. of total. | Shillings per foot. | Per cent. of total. | Shillings per foot. | Per cent. of total. |
| ) ·80 | 62 ·72 | 31 ·10 | 65 | 88 ·47 | 40 ·00 | 88 ·86 | 35 ·82 | 69 ·06 | |
| 2 ·50 | 5 ·26 | 2 ·34 | 4 | 2 ·37 | | | | | |
| ) ·14 | 0 ·29 | 0 ·30 | 0 | .. | 0 ·28 | 0 ·62 | | | |
| 4 ·74 | 9 ·98 | 4 ·34 | 9 | 1 ·45 | 0 ·86 | 1 ·91 | 7 ·34 | 14 ·16 | |
| 5 ·71 | 12 ·03 | 4 ·49 | 9 | 2 ·66 | 1 ·38 | 3 ·06 | | | |
| 4 ·20 | 8 ·85 | 3 ·97 | 8 | 1 ·79 | 1 ·93 | 4 ·29 | 7 ·63 | 14 ·70 | |
| ) ·42 | 0 ·87 | 0 ·81 | 1 | 3 ·26 | 0 ·57 | 1 ·26 | 1 ·08 | 2 ·08 | |
| 7 ·51 | 100 ·00 | 47 ·35 | 100 | 100 ·00 | 45 ·02 | 100 ·00 | 51 ·87 | 100 ·00 | |

Digitized by Google

Digitized by Google

remembered that in the case of a deep hole, the brakes are practically in use continually for three or four hours while lowering the rods, and the friction is liable to cause very considerable heating. Even the best pattern drills now obtainable appear to be faulty in this respect, and in the author's experience considerable delay has resulted from heating of the brakes.

In a total of 10,779 ft. bored, the maximum average progress per working day was 55·27 ft., and the minimum 6·38 ft. (This was in a borehole inclined at 45°). The average for the whole was 16·25 ft.

Out of 8,607 ft. of boring, of which records have been kept, the maximum average depth bored per hour in solid formation (inclusive of lifting) was 2·129 ft., and the minimum 0·034 ft. The average for the whole was 0·89 ft. per hour. The real average would probably be higher, as the boreholes which are omitted for want of records are amongst those in which the best progress was made.

The slowest and most troublesome boring which has come under the author's notice was in the upper part of No. 2 borehole. In this borehole boulders of very hard chert were encountered, inbedded in very much softer material, and considerable difficulty was found in keeping the hole open.

The best speed, considering the circumstances, was made in the Bezuidenville borehole recently described by Mr. J. A. Chalmers, M. Inst. M.M.*

The third main object is to save as much core as possible. To some extent this is evidently the principal object in boring, but as already pointed out, it is sometimes a matter that may be entirely neglected.

The percentage of core that it may be possible to save depends upon the nature of the ground and the diameter of the drill rods.

With the ordinary sizes of rods it is almost impossible to save much core in very broken or soft ground. When the core is broken up the fragments in the core-barrel quickly grind each other to powder, especially in such rock as shale.

When it is essential to save all the core, as for instance when it is believed that the borehole is approaching the reefs, the only thing to be done, if the ground is very soft, is to drill very slowly, and constantly lift the rods, so that the core has not time to be ground away. In these cases also the bore-meal should be carefully settled and collected by the core-watcher, as it comes from the borehole, and can then be examined and assayed.

* *Trans. Inst. M.M.*, vol. v, p. 86.

Digitized by Google

When the whole of the boring has to be done in soft ground, as in boring for coal, the ordinary sizes of diamond drill are unsuitable, and probably the best kind of drill to use is the "Calix," which will take out an 8 in. core.

The smallest percentage of core saved has been 5 per cent. in shale, in borehole No. 5, but this was probably due to carelessness. The largest percentage has been 98·7 also in shale, but this also is unusually good. When boring in good ground solid pieces of core from 6 to 10 ft. long are not unfrequently obtained. The ordinary Witwatersrand conglomerates generally give excellent core.

The average amount of core saved over 9,514 ft. of boring in solid formation was 78·38 per cent.

In the tabular summary the boreholes are not grouped in chronological order, but according to locality.

The heading "Extraordinary Delays," includes, besides Sundays and holidays, such delays as are caused by the failure of water supply, want of suitable tools for repairs, or stoppage of work for any other cause than accidents and repairs.

"Incidental Delays" include all accidents, repairs, reaming, and recovery of lost or broken carbons or broken rods.

These delays average about 10 per cent. of the total working days.

"Surface soil" includes all the ground from the surface to that depth at which core began to be saved. This part of the borehole always had to be cased with 3-in. pipe to keep the hole open.

The records of the boiler power required, as well as of the coal and water used, are very incomplete, and not entirely trustworthy.

In the table of costs the items "Contractor," "Hire of Drill and Depreciation," and "Coal" may be conveniently grouped together. The "Water supply" was invariably a separate account, and, according to the source of supply, may include fuel, maintenance of pumps, cost of wagon transport, &c.

Superintendence includes the salary of the core-watcher, and travelling expenses of the superintending engineer.

The following is the average cost of the 14 boreholes or 7,962 ft. put down by contract:—

Digitized by Google

| | Shillings per ft. | Per cent. of total. |
|---|---|---|
| Contractor, coal, depreciation, &c..... | 33·38 | 81·69 |
| Water supply ..... | 3·95 | 9·66 |
| Superintendence..... | 2·74 | 6·70 |
| Sundries ..... | 0·80 | 1·95 |
| | 40·87 | 100·00 |

The following three boreholes, which do not appear in the summary, were put down with a hand drill:—

*Three boreholes*:—

| | Ft. | in. |
|---|---|---|
| Depth No. 1 ..... | 140 | 0 |
| „ „ 2 ..... | 115 | 0 |
| „ „ 3 ..... | 63 | 6 |
| | 318 | 6 |

Formation: quartzite and amygdaloidal diabase:—

| | |
|---|---|
| Gross time occupied ..... | 121 days. |
| Working days..... | 103 day shift only. |
| Working hours, about ..... | 1,030 |
| Average progress per day..... | 2·03 ft. |
| Average progress per hour..... | 0·309 „ |

*Cost*:—

| | Shillings. | Per cent. |
|---|---|---|
| Hire of drill and wages of 1 European.. | 11·24 | 65·34 |
| Wear of diamonds..... | 0·90 | 5·25 |
| Food and pay of six Kaffirs working drill | 4·83 | 28·62 |
| Sundries..... | 0·13 | 0·79 |
| | 17·10 | 100·00 |

The following short account is given of borehole No. 19, as the records were more complete and the information gained more detailed than in most other cases.

The borehole was put down from the bottom of a vertical shaft 693 ft. deep, in order to ascertain the effect of an overthrust upthrow fault which was known to exist but whose magnitude was uncertain. This object was successfully accomplished, and the main reef series intersected at a depth of 1,850 ft. The total number of feet bored was 1,328, all in quartzite, but in comparing the work done with other boreholes it should be noted that the

Digitized by Google

## Borehole No. 19.

| Total depth. | | | | Depth bored. | | No. of lifts. | Depth bored per lift. | Average time raising and lowering rods. | | Hours actual boring. | | Hours raising and lowering. | | Rate per hour boring and lifting. | Rate per hour actual boring. |
|---|---|---|---|---|---|---|---|---|---|---|---|---|---|---|---|
| ft. | in. | | ft. | in. | ft. | in. | | ft. | hr. | min. | hr. | min. | hr. | min. | ft. | ft. |
| 693 | 1·0 | to | 899 | 0·0 | 205 | 11·0 | 25 | 8·24 | 1 | 58 | 121 | 30 | 49 | 25 | 1·20 | 1·69 |
| 899 | 0·0 | „ | 1,099 | 1·25 | 200 | 1·25 | 31 | 6·45 | 2 | 40 | 165 | 45 | 82 | 50 | 0·80 | 1·20 |
| 1,099 | 1·25 | „ | 1,297 | 0 25 | 197 | 11·0 | 33 | 5·99 | 2 | 44 | 131 | 30 | 90 | 10 | 0 89 | 1·50 |
| 1,297 | 0·25 | „ | 1,501 | 3·25 | 204 | 3·0 | 34 | 6·00 | 3 | 29 | 106 | 55 | 118 | 30 | 0·90 | 1·91 |
| 1,501 | 3·25 | „ | 1,704 | 11·5 | 203 | 8 25 | 23 | 8·85 | 4 | 18 | 118 | 0 | 99 | 0·5 | 0·94 | 1·72 |
| 1,704 | 11·5 | „ | 1,901 | 3·0 | 197 | 3·50 | 18 | 10·96 | 4 | 25 | 122 | 55 | 79 | 45 | 0·96 | 2·65 |
| 1,901 | 3·0 | „ | 2,021 | 3·5 | 120 | 0·30 | 11 | 10·91 | 5 | 12 | 79 | 15 | 57 | 15 | 0·88 | 1·50 |
| 2,021 | 3·3 | ..... | | | 1,328 | 2·50 | 175 | 7·59 | 3 | 18 | 845 | 40 | 577 | 0 | 0·933 | 1·87 |

The cost of the borehole was as follows (excluding erection of drill, &c.) :—

| | Shillings per foot. |
|---|---|
| Carbons | 9·79 |
| Hire of drill | 3·16 |
| Labour | 11·44 |
| Coal | 1·43 |
| Stores | 0·94 |
| Superintendence | 1·28 |
| Sundries | 0·52 |
| Total | 28·56 |

Digitized by Google

total depth attained was 2,020 ft. from the surface. From this point of view the average progress made, 17·25 ft., must be considered very good.

From 693 ft. to 1,229 ft. was bored with a large bit $2\frac{3}{4}$ in. in diameter. From 1,229 ft. to the bottom, at 2,021 ft., was bored with a 2-in. bit.

It was originally intended to put the drill down in the bottom of the shaft so as to utilise the whole depth of the shaft as a derrick; this would have saved a great deal of time, but the shaft was not quite big enough, and also there would have been difficulties with the condensation of steam. It was therefore decided to carry the rods right up the shaft and bore from the surface.

3-in. iron pipes were fixed securely to the timbering of the shaft to serve as a casing. A 3-in. tube was armed with about 9 carats of scrap carbons of small value, and bored about 3 ft. into the solid rock, and securely packed so as to make a watertight joint. This was necessary so as to bring the water up to the surface. The casing was then joined to this tube, so as to make a watertight column right up the shaft.

The cost of erecting the machinery, pumping out and fitting up the shaft, putting in 700 ft. of casing, &c., amounted to about £250. The steam power, both for pumping and running the drill, was taken from the large boiler, which was at the same time supplying steam for other purposes, consequently no exact record was kept of the coal, stores, &c., used in supplying steam, and the drilling was simply charged with a proportion of the total. For the same reason the cost of water supply was not kept in a separate account.

The derrick was 50 ft. high, and 40 ft. of rods was handled at a time. A 20-ft. core-barrel was used, which only became full three times during the whole period, thus showing the length to be amply sufficient.

As regards the quantity of carbons used, the total average amount has already been given at 0·0692 carat per foot, or 9*s.* 9½*d.*

Proper forms, as given below, were only supplied during the latter part of the work; from these it appears that 12 stones, or 17 to 19 carats, were set in each bit, and that the average depth bored by each bit was 25·5 ft.

The following is a convenient form of keeping count of the carbons used. Each bit has a running number, and a complete record of the work done by it is kept:—

Digitized by Google

*Carbon Report.*

Bit No. 34. For Sullivan P Drill.
Set June 19th, 1897.
Put in 12 carbons. Weight 17 31/32 carats.
Placed in drill 9 A.M., June 20th, 1897.
Working at hole No. 2, Johannesburg.
Removed from drill, 11 P.M., June 21st, 1897.
Cut out 11 carbons, weight 16 1/8 carats.
Used 1 27/32 carats.
Bored from 1,705 ft. 6 in. to 1,723 ft. 9 in.

By keeping a record of this kind it is easy to bring home the responsibility for carbons lost or broken, and to know at all times whether good or bad work is being done:—

A convenient form of heading for the log kept by the core-watcher is the following:—

| Date. | No. of core piece. | Length of core piece. | Hour at which boring started. | Hour at which boring stopped. | Time lifting rods and lowering. | Depth bored since last drawing. | Total depth. | Engineer's notes. Journal. |
|---|---|---|---|---|---|---|---|---|
| | | | | | | | | |

Each piece of core is numbered according to the depth. Thus, between 100 ft. and 101 ft. the pieces are numbered 101a/101b, &c. This is better than giving a running number, as it enables the core for any required depth to be found at once.

The core is stored in grooved trays, which, in the case of a deep borehole, are arranged on shelves round the walls of a room set apart for the purpose. Any likely pieces of core are assayed. For this purpose they are split in half with a chisel, which can usually be done easily. One-half is then kept for reference and the other half assayed.

Digitized by Google

# SEVENTH ANNUAL GENERAL MEETING, 23rd March, 1898.

Mr. JAMES MACTEAR (*President*) in the Chair.

---

The Secretary having read the Minutes of the last Annual General Meeting, which were duly confirmed,

Mr. H. J. Carnegie Williams and Mr. W. Truran were appointed Scrutineers of the balloting papers for the election of the members of the Council.

The Report of the Council for the Session 1897-8, together with the Balance Sheet for the year ended 28th February, 1898, were next submitted.

---

## REPORT OF THE COUNCIL.—SESSION 1897-8.

The Council has pleasure in congratulating the members upon the continued success of the Institution during the past year.

The Institution was founded in 1892, and at this, its Sixth Annual General Meeting, it is gratifying to note that membership is becoming more and more appreciated both in the United Kingdom and abroad.

The following table illustrates the progressive strength of the Institution since its formation:—

| | 1894-5. | 1895-6. | 1896-7. | 1897-8. |
|---|---|---|---|---|
| Honorary Members .. | — | 4 | 4 | 4 |
| Members .. .. | 167 | 187 | 224 | 254 |
| Associates .. .. | 80 | 101 | 117 | 130 |
| Students .. .. | 48 | 80 | 104 | 113 |
| | 295 | 372 | 449 | 501 |

The Council has to deplore the deaths during the year just ended, of Messrs. Thomas J. Bewick, M.Inst.C.E., P. W. Duffield,

Digitized by Google

Walter Marsh, A.R.S.M., Thos. Spence, and Adam Watson, Members, and R. Spencer Hawkins, A.R.S.M., Associate. In addition, two Associates and one Student have resigned, and two Associates have been removed by the Council in consequence of the non-payment of fees.

The following gentlemen have been elected during the year:—

*Members*:—W. R. Appleby, Philip Argall, H. P. Barry, S. L. Bensusan, T. Burrell Bewick, J. R. Bowick, J. W. Cann, A. F. Crosse, H. J. Daly, W. R. Feldtmann, E. R. Field, A. von Gernet, R. A. Hadfield, Otto H. Hahn, Joseph Hassall, John Leechman, Henry Lyon, William McNeill, W. B. Middleton, J. A. W. Murdoch, S. B. Newall, H. M. Porter, Joseph Pryor, C. S. Richardson, T. Kirke Rose, W. H. Sandiford, A. L. Simon, Alexander Stewart, G. E. Tilden, and R. A. Varden.

*Associates*:—T. R. Archbold, E. G. Banks, F. G. Claudet, W. Day, W. H. Derrick, H. C. Hoover, D. H. Lawrance, A. W. Marshall, R. Pawle, S. G. Pearson, F. C. Pengilly, Chas. J. Smith, and P. B. Waugh.

*Students*:—H. S. Brandon, C. M. Bryant, W. L. C. Butter, W. B. Christian, H. H. Claudet, S. C. Dyer, Thos. Girtin, A. W. Gordon, R. H. Greaves, W. F. Holmes, H. E. Jackson, A. J. Jones, Matthew Little, R. M. Nevile, J. L. Popham, F. H. Probert, T. G. Stamm, L. C. Stuckey, and R. B. Webber.

The following papers have been read at the ordinary meetings during the year just ended:—

"Gold Mining in Norway," by JOHN DAW, junr., M.Inst.M.M.

"Graphic Assay Plans," by WILFRID WYBERGH, Assoc. Inst.M.M.

"Mining Accounts and Cost Sheets," by A. G. CHARLETON, M.Inst.M.M.

"Notes in an Examination of a Mine in the Klerksdorp District, Z.A.R," by G. A. DENNY, M.Inst.M.M.

"Notes on an Electric Drill, used in the Rosedale Ironstone Mines," by J. DOUGLAS HAY, Assoc. Inst.M.M.

"Notes on an Experimental Hand-jig," by P. W. DUFFIELD, M.Inst.M.M.

"Notes on the Experimental Treatment of a Gold Ore from the Hannan's District, Coolgardie, Western Australia," by ARTHUR C. CLAUDET, M.Inst.M.M.

Digitized by Google

"Notes on Sump Solutions, Extractor-box Work, and Cleaning-up, in the Cyanide Process," by ALFRED JAMES, M.Inst.M.M.

"Notes on the Sampling of Argentiferous and Auriferous Lead, with Diagrams illustrating the Unequal Distribution (Segregation) of the Precious Metals," by ARTHUR C. CLAUDET, M.Inst.M.M.

"The so-called Lode Formations of Hannan's, and Telluride Deposits," by H. P. WOODWARD, M.Inst.M.M.

"Notes on the South German Mine, Maldon, Victoria," by JAMES MACTEAR (President).

"Mining in Perak," by FRANK OWEN, M.Inst.M.M.

"Note on the so-called 'Selective Action' of Cyanide of Potassium for Gold," by W. A. DIXON, M.Inst.M.M.

"Mining on the Black Reef, Witwatersrand Goldfields, South Africa," by WILLIAM FISCHER WILKINSON, Assoc. Inst.M.M.

"Notes on Smelting at Broken Hill," by HENRY WATSON, Assoc. Inst.M.M.

"Notes on the Buying and Sampling of Ores, and the Working of Mines on the Tribute System, in Chili," by GERALD V. HOPKINS, Assoc. Inst.M.M.

"Notes on the action of Cyanogen on Gold," by JAMES PARK, M.Inst.M.M.

"Mexican Methods of Mining," by S. B. NEWALL, M.Inst.M.M.

"On the Successful Treatment of Tailings by the Direct Filling Process on the Witwatersrand," by F. CARDELL PENGILLY, Assoc. Inst.M.M.

"Notes of a Visit to the Gold Mines at Kalgoorli, Western Australia," by WM. FRECHEVILLE, M.Inst.M.M.

"Notes on Shaft Sinking," by W. TEAGUE, M.Inst.M.M.

"On Diamond Drilling in the Transvaal," by W. WYBERGH, Assoc. Inst.M.M.

Several important improvements have been introduced in regard to the publication of the *Transactions*, and the high character of the papers has been well maintained. Interesting discussions have been elicited on many of the papers read.

JAMES MACTEAR, *President.*
A. JOHNSTONE CAMPBELL,
S. HERBERT COX,
BENEDICT KITTO,
} *Hon. Secretaries.*

28*th February*, 1898.



Digitized by Google

# INSTITUTION OF MINING AND METALLURGY.

Dr. BALANCE SHEET, 28TH FEBRUARY, 1898. Cr.

| | £ | s. | d. | £ | s. | d. |
|---|---|---|---|---|---|---|
| To Sundry Creditors .... .... .... .... .... | | | | 137 | 9 | 1 |
| Subscriptions paid in advance .... .... .... | | | | 31 | 5 | 0 |
| Accumulated Fund— | £ | s. | d. | | | |
| Balance at 28th February, 1897 | 596 | 8 | 8 | | | |
| *Add* | | | | | | |
| Office Furniture, not included therein (cost £78 16s.) now valued at .... .... .... | 50 | 0 | 0 | | | |
| Library, not included therein (cost) .... | 24 | 12 | 6 | | | |
| | 74 | 12 | 6 | | | |
| | £671 | 1 | 2 | | | |
| *Add* Excess of Income over Expenditure for the year ended 28th February, 1898, as per account (annexed) .... .... .... | 19 | 10 | 9 | | | |
| | | | | 690 | 11 | 11 |
| | | | | £859 | 6 | 0 |

| By Cash— | £ | s. | d. | £ | s. | d. |
|---|---|---|---|---|---|---|
| At Bank, Messrs. Prescott, Dimsdale, Cave, Tugwell, and Co., Limited.... | 173 | 11 | 10 | | | |
| In Secretary's hands ..... ..... | 9 | 14 | 11 | | | |
| | | | | 183 | 6 | 9 |
| Investments— | | | | | | |
| £502 London and South Western Railway 3 % Consolidated Debenture Stock (at cost) .... .... .... .... | | | | 599 | 10 | 9 |
| Interest accrued .... .... .... .... .... | | | | 1 | 16 | 0 |
| Office Furniture, &c., valued at .... .... .... | | | | 50 | 0 | 0 |
| Library (at cost) .... .... .... .... .... | | | | 24 | 12 | 6 |
| | | | | £859 | 6 | 0 |

Digitized by Google

## Dr. Income and Expenditure Account for the Year ended 28th February, 1898. Cr.

### Expenditure.

| | £ | s. | d. | £ | s. | d. |
|---|---|---|---|---|---|---|
| To General Expenses,—viz.: | | | | | | |
| Salaries | 180 | 0 | 0 | | | |
| Rent of Offices (14 months) | 105 | 0 | 0 | | | |
| Office Cleaning ,, | 12 | 8 | 7 | | | |
| Coals and Gas | 3 | 2 | 0 | | | |
| Stationery and Printing | 47 | 0 | 9 | | | |
| Postage and Telegrams | 71 | 18 | 11 | | | |
| Travelling Expenses | 3 | 19 | 5 | | | |
| Hire of Theatre for Meetings | 15 | 19 | 6 | | | |
| Reporting | 15 | 10 | 2 | | | |
| Printing *Transactions* | 290 | 9 | 1 | | | |
| Bank Charges | 0 | 14 | 4 | | | |
| Audit Fee | 10 | 10 | 0 | | | |
| Sundry Expenses | 32 | 15 | 9 | | | |
| | | | | 789 | 8 | 6 |
| To Balance carried to Accumulated Fund— | | | | | | |
| Excess of Income over Expenditure for the Year ended 28th February, 1898 | | | | 19 | 10 | 9 |
| | | | | £808 | 19 | 3 |

### Income.

| | £ | s. | d. | £ | s. | d. |
|---|---|---|---|---|---|---|
| By Subscriptions— | | | | | | |
| Life Members | 63 | 0 | 0 | | | |
| Members | 262 | 9 | 0 | | | |
| Associates | 105 | 1 | 1 | | | |
| Students | 76 | 13 | 0 | | | |
| | | | | 507 | 3 | 1 |
| By Subscriptions— | | | | | | |
| For 1893 received in 1897 | 3 | 13 | 6 | | | |
| 1894 do. do. | 3 | 17 | 6 | | | |
| 1895 do. do. | 24 | 3 | 0 | | | |
| 1896 do. do. | 117 | 14 | 2 | | | |
| | | | | 149 | 8 | 2 |
| By Entrance Fees | | | | 100 | 16 | 0 |
| Interest | | | | 8 | 1 | 8 |
| Sale of *Transactions*, Reprints, and Binding | | | | 43 | 10 | 9 |
| | | | | 808 | 19 | 3 |
| | | | | £808 | 19 | 3 |

ARTHUR C. CLAUDET,
*Hon. Treasurer.*

*Examined and found correct,* WOODTHORPE, BEVAN, & CO.,
Chartered Accountants, *Auditors.*

Leadenhall Buildings, London, E.C.,
21*st March*, 1898.



Digitized by Google

## DISCUSSION.

**The President** expressed his gratification at the gradual advance which was being made in regard to the number of members. The more members the Institution was able to attract, the greater would be the circle of its influence. He thought, however, that more might be done by the members themselves to induce their friends to join the Institution, which was now a firmly established body doing useful work. They would be glad to see amongst the names of the latest recruits to their ranks, several men of considerable eminence in their profession. The list of papers which had been read during the past year showed that the Institution was acquiring, and storing up for reference much valuable information which could not fail to be of use to members. It was very gratifying to the Council to see that not only were they increasing their numbers, but that their financial resources were growing. For this the Institution was indebted, beyond measure, to their Hon. Treasurer, Mr. Claudet, and it was impossible to speak strongly enough as to the amount of labour he had devoted to the Institution. It would be observed that they had now an invested sum of nearly £600 which formed a reserve fund. He desired formally to move the adoption of the Report and Accounts.

**Mr. Claudet** said that there were one or two points with regard to the accounts which he desired to remark upon. That was the first occasion on which they had issued a real balance sheet, the published accounts hitherto only being statements of receipts and expenditure. It would be observed that they had been able to invest £600 as a reserve fund for the Institution, and he hoped that year by year they would be able to invest further amounts. Considering that the Institution had only been in existence for six years, he thought that the formation of a reserve fund to the extent of £600 was a very creditable performance. It had to be borne in mind that the expenses of such an Institution tended to increase—they certainly would not decrease. The increased expenditure was due to the fact that the Council were endeavouring year by year to improve the *Transactions*, and that cost money; while increased membership meant increased expenses in the matter of postages and other items. With regard to income, based on the number of members at present on the books, he thought that this year there ought to be a surplus over expenditure of £100; they would of course hope to elect more members, and possibly there might be a surplus of £200. If they went on at this rate,

Digitized by Google

and invested their surplus funds in the way they had commenced to do, it would greatly strengthen the Institution. The question of obtaining a Charter for the Institution would sooner or later have to be considered, and he believed that it would considerably improve their status if they could obtain one. A matter which was not included in the accounts before them were arrears of subscriptions. The difficulty under which they laboured was that their members were so scattered throughout the world, that it was impossible to get the subscriptions in quickly. He was much obliged to the President for the flattering terms in which he had alluded to his endeavours. When the Institution was first formed there were many prophecies of failure, but they could see for themselves what a very strong and satisfactory position the Institution had created for itself.

**Professor Huntington** seconded the adoption of the Report and Accounts, which was carried unanimously.

**The President** then announced that the Scrutineers had reported that the balloting papers were in order, and that the new Council was constituted as follows :—

## COUNCIL—1898-99.

President:

WALTER MCDERMOTT.

Vice-Presidents:

C. ALGERNON MORRING.
EDGAR TAYLOR.

Members:

CHARLES J. ALFORD.
R. T. BAYLISS.
A. JOHNSTONE CAMPBELL.
A. G. CHARLETON.
ARTHUR C. CLAUDET.
S. HERBERT COX.
WILLIAM FRECHEVILLE.
J. HAYS HAMMOND.
EDWARD HOOPER.
ALFRED JAMES.
HENNEN JENNINGS.
BENEDICT KITTO.
ARTHUR L. PEARSE.
H. C. PERKINS.

Digitized by Google

EDWARD RILEY.
R. P. ROTHWELL.
WILLIAM THOMAS.
CLAUDE VAUTIN.

*Hon. Secretaries:*

S. HERBERT COX.
BENEDICT KITTO.
ARTHUR L. PEARSE.

*Hon. Treasurer:*

ARTHUR C. CLAUDET.

**The President** in vacating the chair, said that it was difficult for him to say whether he did so with pleasure or regret. He certainly had a great deal of pleasure in introducing his friend, Mr. McDermott, to the Chair, as he was sure that in Mr. McDermott the Institution would have a President who would do justice to the position. He left the Chair with regret because he was leaving a position in which he had had a great deal of pleasure, and he wished to heartily thank the members for their forbearance towards his failings as President. It was a difficult post to fill, as there was a danger of doing too little or too much, but he trusted he had gone as close as possible to the happy medium.

The newly elected President (Mr. Walter McDermott) then took the Chair, and delivered the following address:—

Digitized by Google

# PRESIDENTIAL ADDRESS.

By WALTER MCDERMOTT (*President*).

GENTLEMEN,

During the first few years of the life of the Institution, the position of President was not, in my opinion, a much to be desired one; and although my predecessors in the chair have made polite remarks as to the honour done them by their election to office, I think the Institution has been more indebted to the Presidents than those officers to the Institution. There has been, in fact, more work than glory; and the head of the Council has had to devote valuable time to labours which could show but little and slow growing fruit as a result. With the present successful and established position of the Institution itself, the point has been reached at which a new President may with truth, as well as politeness, express some sense of gratitude for his nomination. I desire, therefore, to put on record my thanks to former Presidents who have in their self-sacrificing labours softened the asperities of the seat I am to occupy. Another reason for gratitude towards our Past Presidents is that they have, after their year of office, continued as active members of the Council to direct the affairs of the Institution.

Professor Huntington, in his Presidential address to you, touched lightly on the superior advantages which American mining engineers and metallurgists enjoyed in an educational way over young Englishmen, from the opportunities afforded them of getting the best experience at home. I should like to amplify somewhat the statement in view of its bearing on our successful existence as a useful Institution. Not only is the truth of the statement, I think, self-evident, but the result of the condition mentioned has been only too apparent. Our students must go abroad to get any useful experience of modern practice in metalliferous mining and in metallurgy, and a few years ago America was the only place to go for this. We have some smelting works

Digitized by Google

in England which do not by any means throw open their doors to seekers for experience, and a young man may go to Cornwall and learn the essential elements of mining as far as pounding a drill and timbering, &c., is concerned; but it will not be seriously maintained that the experience which can be obtained in this country will fit a man to compete on equal terms with the managers of mines or works in America, South Africa, or certain places in Australia.

It has resulted from these too obvious facts that there was in the past some scepticism as to whether we could make an English Institution of Mining and Metallurgy as broad and modern as it must be to attain success. Any such doubts arose from overlooking the point that our membership would not be limited to graduates of Science Colleges, and to those in practice alone in England, but would be made up largely of managers of mines and works, and consulting engineers, whose experience had been abroad, or who were still occupied abroad; and mere distance now-a-days is no important element to consider. The necessity for going abroad to keep up with modern requirements is not confined to English students, as German and French engineers certainly have equally to leave their own countries before they can be said to be experienced outside of certain narrow lines. As already stated, however, we fortunately do not need any arguments now as to London being a proper centre. It has resulted from our constitution that we have, in addition to members and associates, a very good list of students to whom benefits will accrue which their predecessors in the profession certainly did not enjoy in England. If they are unable to see much which it is essential they should be familiar with later in order to be abreast of the times, they will have the great advantage of reading papers from, and occasionally hearing discussions by, men of experience in every mining district, and no preparation can be better for actually doing responsible work.

At an annual meeting like the present it is permissible to indulge in a reasonable amount of self-congratulation, tempered by the knowledge that continued success is dependent on continued effort. Our reason for thankfulness is based on the position of the Institution, as shown by the following statement.

We consist of 4 honorary members, 254 members, 130 associates, and 113 students, or a total membership of 501. Applications for entrance to the Society continue to come in regularly from various parts of the world. The financial position has become so satisfactory, in spite of increased expenses in improving the

Digitized by Google

*Transactions*, that the Council has had added to its other cares the anxiety of the capitalist who cannot find a safe investment with any reasonable rate of interest. Should the funds continue to increase so as to materially add to the annoyance of the Council in this way, it may become necessary to invest in mining stocks, and thus remove the source of irritation whilst encouraging home industry.

The papers read at our meetings have increased in numbers and in interest; and the original design of making membership an evidence of some practical experience in mining or metallurgy has been kept steadily in view. We do not pretend that membership is a hall mark showing the exact percentage of fine gold which can be realised from any duly stamped individual; but we can show from the records on which we elect to the Institution that the alloy when stamped is not wholly brass. We have an increasing number of Australian members, and many American members, likewise French and German. We are cosmopolitan as to membership, and this should insure success in our metropolitan character.

Having referred to our general standing, I may appropriately call your attention to the importance of the mining field which particularly justifies the existence of a central organisation in London for mining and metallurgical engineering. The estimate of the world's production of gold for 1897 is about eleven and a half million fine ounces, or, say, £46,000,000 sterling. Of this amount over one half was derived from English colonies and possessions and South Africa; and we may certainly claim that English capital and English engineers have had, and will have, much to do with these particular sections of the world's mining industry.

I have mentioned gold mining as best illustrating the point in view; but it is equally true to say that in silver, copper, lead, and tin, English capital and English skill are important factors in the world's production, and these metals come within the range of our members' interests. These remarks may in effect be but repetition of former statements from the Chair, but no institution can flourish unless its members believe in its importance; and a certain factor of enthusiasm must be cultivated in working for objects of a general rather than specific value. Having thus touched on our excuse for existing, our past history, and present satisfactory standing, I need to apply the moral by begging our members to co-operate heartily with the Council in the continued provision of good papers and discussions for our meetings and *Transactions*, and by introducing

Digitized by Google

desirable applicants for admission as members, associates, and students. In connection with the request for a little individual effort in supplying papers, I should like to remind you of the two physiological facts that half a loaf is better than no bread, and that in certain circumstances a concentrated form of food is even preferable to a more bulky one. In other words, those who have no time, or desire, or capacity for writing a long and elaborate paper may, with trifling effort, give us occasionally a note on any matter of interest. We want to hear from all parts of the world, and on all subjects relating to mining and ore reduction; so that there is not a member or associate at work who cannot once and again find some small matter bearing on ore occurrence, machinery detail, or process modification worth putting on record.

In a review of the mining industry since the Institution was established, nothing is more striking than the wonderful improvement introduced in the treatment of many gold ores by the MacArthur-Forrest process. I use this term advisedly here, instead of referring to cyanide treatment (although this latter name is destined from its shortness and more general application to supersede the former) because I wish to express to the inventors of the process, a tribute of gratitude which, in my opinion, the mining industry undoubtedly owes to them.

Of course we may quibble as to the exact definition of the term "inventor," and the Patent law must be upheld as one of regulations and not of sentiments; but no one acquainted with the history of cyanide treatment can doubt that Messrs. MacArthur & Forrest were the first to find out and apply practically to gold ore treatment the solvent power of cyanide of potassium. Whatever had been previously written in books of chemistry, in the notes of laboratory experimenters, or suggested in patent processes, had been absolutely forgotten, fruitless, or unapplied, when the idea took eventually its practical shape in the hands of MacArthur & Forrest, through large experiments followed shortly by application on a working scale to gold ores. I am of the opinion that the broad facts were so generally recognised by mining men that the patents themselves would not have been seriously attacked in most countries if the commercial management of their utilization had not been of a very shortsighted and irritating description. Few patents in these days will stand any great strain on their strength, and this is particularly true of claims resting on chemical reactions. Having given the fullest credit to the original discoverers for what has developed into the only revo-

Digitized by Google

lution in ore treatment of the last 20 years, it is to be noted that its present extensive development is due to the efforts of many workers in many parts of the world. The efficiency of the process, its reduced cost, and enlarged application to different ores, makes it an essential subject of study now for all who are professionally interested in the treatment of gold ores.

Our own *Transactions* already contain several important papers and discussions on the process; and it occupies a prominent part in the *Transactions* of other societies having a similar scope to our own. I have it on good authority that the estimated world's consumption of cyanide of potassium for 1898 is over 6,000 tons. Before the introduction of the process, a very few years back, the consumption of cyanide for all purposes was insignificant. We number among our members several well known authorities on all points relating to cyanide treatment, and we have with us a large number who are actively engaged in its application in different quarters of the globe. It makes a fruitful subject for theories and discussions, and for experiments both scientific and empirical. There is a charming diversity of opinion as to nearly every one of the various chemical reactions involved, and therefore no better field can exist for purely scientific investigations to establish some of these points. In the commercial application there is the recurring opportunity in new plants of improving the mechanical part of the process to ensure economy of working; and there is the chance of increasing extraction and diminishing loss of cyanide by little variations in the details of treatment. Such steps in the progress of the art our members should not keep selfishly to themselves when observed or developed, but should afford us their use, and thereby enrich our *Transactions*.

In connection with this subject, I should like to call attention to the very successful and extensive treatment of the slimes at Johannesburg, accomplished practically during the last year. I refer to the addition of about 5 lb. of lime per ton of slimes, the subsequent settling of these to a thicker pulp, and then washing by decantation with weak cyanide solutions. There is no portion of this process which is an actual novelty, but the mechanical arrangements for its operation have been so cleverly combined as to establish satisfactory settling, efficient extraction, and economy of handling. A satisfactory solution of the slimes difficulty, as well as of the gold, gives the wet process of crushing another start ahead of the dry in their relative claims for consideration in ordinary cases. There have been strong advocates of late for dry crushing as a preparation for cyaniding, and it has been success-

Digitized by Google

fully adopted in some cases; but men of experience seem only to accept it in place of wet stamping when local conditions actually force or favour its adoption; as, for instance, where roasting is necessary, or rock is very productive of slimes, or when coarse crushing is allowable. In touching on these various matters of great present interest to the profession, and all-suggestive of new papers for our coming business year, I should also include the mention of the later experiments as to stamping direct with cyanide solution (now in use in New Zealand, and I believe elsewhere), and the details of which we ought to have before us.

In direct connection with cyanide treatment—actually originating with the development of this process—a very remarkable and highly important fact is to be observed in gold mining, to wit, the search for and successful working of entirely new classes of gold deposits. I may mention as illustrations, the calcareous beds of Utah and Borneo, which for any extensive and profitable treatment must depend at present on cyanide. The Utah deposits of the Mercur district are generally known, and the gold product has reached an important figure already. The Borneo auriferous limestone is less well known, as only one small experimental plant has hitherto been in work; though a very large dry crushing plant is now erected, and has but lately started. It may be taken as certain that we are at the beginning only of these discoveries of beds and impregnations, which in former years would not have attracted attention, owing to the absence of payable colours of free gold. In the past the practical man wanted to see his gold by panning; for outside of the value in sulphurets (which last are evident to the eye if existent) he knew that the process he had to depend on for extraction would apply only to what he could find out by the pan. Assaying has thus had its dignity reasserted, not only as a mere auxiliary to panning, but as a prime necessity over an extensive field of work wherein panning is useless. It is true that chlorination, as now extensively conducted in the United States, can be applied to ores which will not yield to amalgamation, but the process is more expensive than that of cyanide, and is not applicable to certain ores, even if generally more perfect in extraction. The roasting which is practically a necessity for chlorination, is now being extensively used as a preliminary to cyanide treatment on ores which, owing to their baseness and high grade, cannot commercially be treated raw with advantage.

Both cyanide treatment and chlorination are chemical processes, easily disturbed in their application by very slight modifi-

Digitized by Google

cation in conditions of working, and minute changes in the character of ore treated or reagents employed. Both, therefore, require scientific knowledge for their superintendence, as well as practical skill in their handling. The effect can be clearly observed in South Africa, where we see the gold extraction in the hands of a body of highly skilled technical men, metallurgists in the fullest acceptation of the term, instead of as formerly controlled by millmen whose skill was of a less high order, though equally important in the department still in their hands of efficiency of crushing and amalgamation. The bearing of the facts is, I think, evident as to the increasing field for the mining engineer and metallurgist, and the consequent future importance of our Institution as a central exchange for knowledge; a metropolitan clearing house for ideas and experience of the mining world, because all things and all men come to London.

Our interest in copper smelting and refining should be awakened by the great developments taking place in the Mount Lyell district of Tasmania, and which will make another great geographical and metallurgical division of the copper industry. We have Rio Tinto with its pyrites and varied processes, Lake Superior with its concentration of metallic copper, Montana with its silver-bearing sulphide ores concentration, matting, Bessemerising, and electrolytic refining, and now Mount Lyell with its pyritic smelting and Bessemerising. In this last district, of late important discoveries of really large deposits of high grade copper ores have been made, quite distinct from the lower grade pyrites; and the mining and metallurgy of this rich sulphide ore will, I am certain, prove to be matters of great interest to us in the future.

Of interest to us, and a very noteworthy development of mining finance in these days, is the extraordinary number of promotion and exploration companies formed as a sort of intermediary class between the owners of mines and the investing public. These companies have become a sort of fly wheel to the financial mechanism which moves the mining business; they collect and store up the excessive energy of boom times, and keep things moving over the dead centres of depression which succeed. As a consequence, the times of depression in mining now are simply indicated by low prices of shares—even this not always as a general reduction, but occasionally affecting only the mines of certain districts—and the actual mining goes on actively just the same. This is certainly a great advance over former times, when short outbreaks of reckless speculation alternated with long

Digitized by Google

periods of public distrust and neglect. Of course, like the production of many good things, these promotion companies have engendered intemperance. The unemployed individual of broad views if limited experience, has incorporated himself into a limited company, and elected a body of directors to carry out the details of meeting his drafts on the treasury while he tries to convert prospect holes into mines. Some of the companies have done more in Throgmorton Street than in mining, and will work injury from sustaining a scale of prices absolutely artificial. Still in spite of some drawbacks, only to be expected in a world where nothing is perfect, capital now aids mining as it never did before. In the operation of these exploration companies occupation is found for many engineers and managers, and their energy is directed to the discovery of new fields for the utilisation of fresh capital, which is supplied most liberally as working capital for the erection of modern plant and improved machinery. It follows from these improved conditions that, if any institution is any good to any profession, our Institution of Mining and Metallurgy in London has a great future, fully warranting a continuance of the efforts which have been so far successful. You will notice perhaps a sort of refrain to my remarks—I should like it to be a chorus.

Sheltering myself behind the fact of our having students with us, I should like to touch on some points of morality connected with the duties of mining engineers, in connection with the reporting on mines. You need not feel under any apprehension that I am about to inflict on you a repetition of a paper I have already read on Mine Reporting; but as I have suffered a good deal recently in the reading of many reports; and, as we attempt by our investigation of applicants for membership to bring up the grade of the material by hand sorting, it seems I have a justification for indulging my present desire to moralise. Briefly put as a text, I consider that many mining reports are dishonest. Not in the sense of being intended to deceive, but from the fact that full conscientious work has not been expended in proportion to the fee charged. Any one who has had to attempt to get a fair average sample, for example, of a hard quartz vein carrying gold irregularly distributed through it, knows that to do it properly involves patient and laborious work. There is always a temptation to accept points of the mine openings convenient for the breaking down; to space the samples with reference to time considered to be at disposal; to reduce size of

Digitized by Google

samples taken to suit convenience; to accept assistance from sources not absolutely sure; and the yielding to one or more of these temptations ruins the value of the report as a reliable piece of work. There is no rule as to spacing of samples, except that the shorter the intervals the better; and there are many reports with conclusions based on samples taken 50 ft., nay 100 ft. apart, when the distance should not exceed 5 ft. The experience of many companies operating in Western Australia of late as to the difference existing between assay values and milling returns is sufficient to exhibit the errors into which it is easy to slip in this most difficult part of an engineer's duties; and the cause of error in many of these cases seems to be proved by the reports themselves as due to scamping the work of sampling.

Unfortunately we cannot put these cases down simply to youth and inexperience, for flagrant examples are seen in the reports of mine managers and engineers who have been many years in the business. I have seen reports by Australian mining managers of over 20 years' experience, which any sharp junior clerk could be taught (in a few weeks' cramming with technical terms) to duplicate, with equal chances of being correct in his conclusions. In fact the result of the public and the profession being satisfied with such reports, has been shown of late years by the rapid development of men, without training or experience, into mining experts of authority. Impudence and financial instinct seem in many cases to very satisfactorily replace experience, care, and judgment; and this is of course more particularly the case when the career starts with a piece of good luck in the way of a mine opening up rich. It is only in taking a broad view of the mining business, and observing the individuals engaged in it over a series of years, that the full justification of honest and intelligent work is seen to be more complete than hasty observation would occasionally seem to imply. There is, however, undoubtedly an element of luck in mining matters which cannot be commanded; but we can at least deserve it; and we can command consideration for honest work, and thereby increase our chances of meeting our fair portion of luck by reason of the longer active career secured.

I think the criticism I have ventured on will be popular. Each of you here present will, I know, feel that the remarks do not apply to him personally, but he will think they should do a lot of good to some other fellow he knows; and the production of this comfortable feeling is of the essence of a popular statement. The Council has found that an increasing importance is being attached

Digitized by Google

to membership both by insiders and outsiders, so that anything bearing on the quality of professional work seems to me fair subject for mention in a presidential address. In view of the peculiar difficulties and temptations in the life of a mining engineer, I think every school of mines should have a department of ethical culture included in the regular course, with a graduated series of moral gymnastics to strengthen the conscience of the student before he is turned loose.

I began in a spirit of thankfulness for past mercies and Presidents; I cannot do better than end in a similar strain by calling your attention to the continuous and valuable services of our Honorary Treasurer and Editor, Mr. Claudet. Presidents come up and Presidents go down, but Mr. Claudet is the frictionless bearing on which the Institution revolves.

---

**Professor Huntington** proposed a vote of thanks to the President for his address, which was both instructive and amusing, and to which he had listened with much pleasure. Mr. McDermott had been connected with the Institution from its commencement, and had given a large amount of time and labour to its business and rendered valuable assistance in many ways. He thought the President's reference, at the end of his address to Mr. Claudet, was a very happy one, and he desired to endorse it. Mr. Claudet could not receive too much thanks for the trouble and pains he had taken to ensure the smooth working of the Institution.

**Mr. R. T. Bayliss** seconded the vote of thanks. He said he had the pleasure of reckoning their new President amongst his personal friends, and he felt that the Council had chosen wisely in electing Mr. McDermott. He thought that the students would do well to study with great care the President's remarks with reference to reporting on mines and the errors into which it was possible to fall. Like the President, he had occasion to read innumerable reports upon various mines, and could appreciate the train of thought that was in his mind at the time of writing his remarks upon the subject. He cordially endorsed Professor Huntington's remarks with regard to Mr. Claudet's services, which he knew from experience to be of inestimable value to the Institution.

The vote of thanks was then put to the meeting and carried.

**The President** thanked the speakers for the kind manner in which they had received his address, and the confidence they had

Digitized by Google

expressed in his future utility in the office to which he had been elected. He could only say that he would do his best, and quite recognised that in accepting the position he made himself liable to heavy calls upon his time, but the same might be said of the members of the Council, who also gave a considerable amount of time to the business of the Institution.

**Mr. J. H. Collins** said that it was his pleasant duty to propose a vote of thanks to the retiring President, Mr. Mactear. They had all recognised the "iron hand in the velvet glove," which was so useful and necessary for a President to possess. The members and the Institution were certainly indebted to Mr. Mactear for his services whilst occupying the chair.

**The President** seconded the vote of thanks, which was carried unanimously.

**Mr. Mactear,** in acknowledging the vote, said that he had tried to do the best he could for the Institution, and his only regret was that perhaps he might have fallen short of what he had intended to do. He thanked them sincerely for their appreciation of whatever services he had been able to render.

The Seventh Annual General Meeting then terminated, and was followed by an Ordinary Meeting.



Digitized by Google

## SIXTH ORDINARY MEETING, 23rd March, 1898.

Mr. WALTER McDERMOTT (*President*) in the Chair.

---

**The Secretary** having read the minutes of the last meeting, which were duly confirmed,

The following paper was read.

## "The Minerals which accompany Gold, and their bearing upon the Richness of Ore Deposits."

By T. A. RICKARD, M.Inst.M.M.

IN the general advance of knowledge anatomy has distanced medicine. The surgeon works with confident skill while the diagnosis of the physician is yet a faltering guess. It is thus in our own profession. The structure of the rocky envelope of the earth has been in many localities so carefully deciphered that the mining engineer can unravel the geology of an ore deposit with a success to which the mines of Leadville, Bendigo and Gympie bear ungrudging testimony. When, however, he endeavours to ascertain the causes which have determined the presence of gold at one spot and its absence at another he hesitates, and, saturated with the brutal experience of widely separated regions, he confesses that it is a phenomenon yet to be explained.

The working of gold mines in different countries has yielded an accumulation of scattered evidence which needs only scant examination to emphasise how incomplete and contradictory it is. The absence of accurate knowledge on this subject has encouraged the growth of attractive fallacies, in the combating of which the whole matter often comes up for informal discussion wherever mining men congregate. During recent journeyings over the goldfields of West Australia, I found that many an old fallacy had sprung again into vigorous life amid the congenial atmosphere of a community over which the windy breath of a boom had but lately passed.

It may seem a thankless task to oppose those plausible theories, which become rampant only when facts are scarce, yet I am convinced that in the search after truth the first step must be to

Digitized by Google

sift the little that we really do know from the much that we think we know; the first is science, the second is popular knowledge. The old industry of mining was formerly guided by the venerable rule of thumb, and would forever have remained but a blind sort of groping in the dark had it not obtained the willing aid of the younger science of geology.

The immediate problem to which my most recent experience has called attention may be summarised thus:—In examining a lode only incompletely developed and in a new country, what is the evidence on which a correct estimate of the prospective value of the mine may best be based? The two most common answers would be a plain denial of any man's ability to see further into the ground than the point of his pick, and against this obvious surrender would come the reply that the best indication would be found in the presence of particular minerals in association with the gold.

It is this question of indicative minerals which I purpose discussing. The experience of certain mining districts has gone to prove that gold is notably accompanied by particular minerals, and this to such an extent that they are considered to assure the richness of an ore in which the gold itself cannot visibly be discerned. These "indicative minerals," as they may be termed, are not the same in every locality. A few examples, such as have come within my own experience, may be quoted. Every mining engineer can add to the list.

In Boulder county, Colorado, roscoelite (a vanadium mica) is closely associated with the tellurides of gold (calaverite and sylvanite). This fact is rendered of additional interest because the same rare mineral has been recognised by me in the telluride ores of Kalgoorli, in West Australia.* At San Andreas, in California, uranium ochre (the yellow oxide of uranium) is found to distinguish the pockets of specimen gold ore to such an extent as to serve as a guide in prospecting. In several parts of Arizona, in Yuma, Yavapai and Pinal counties, especially the last, vanadinite and descloizite (both vanadates of lead) characterise ores rich in gold and silver. Wulfenite (the molybdate of lead) often accompanies the vanadium minerals, and has been noticed in the ores of two celebrated lodes, the Comstock in Nevada and the Vulture in Arizona. The association of gold with these lead ores is notable, because the particular minerals mentioned are all of great beauty and delicacy. The same may be said of crocoite

* Roscoelite also occurs generously in the veins of the district (El Dorado) where gold was first discovered in California.



Digitized by Google

(the chromate of lead), which characterises several gold veins in the North Coolgardie goldfield, especially at Menzies.* The more common sulphide, galena, is also an accessory mineral in the richest mines at Menzies, and accompanies coarse native gold. At Niagara, Pinyalling, and Wagiemoola, three widely separated localities in West Australia, I found gold closely associated with tourmaline in the form of acicular crystals in contact with coarse gold, and also in a condition of minute diffusion forming dark blotches in the white quartz. The gold ores of the Mysore in India carry tourmaline.

Instances might be multiplied, but it would be to no purpose. Those already cited will serve as a sufficient text for the discussion of the subject.

Such occurrences as these would seem at first sight to afford a much needed aid to the explorer. It is unfortunately easy to prove that as evidence they, and any number more of them, are of very uncertain value in a new mining territory, because they are contradicted by similar testimony of a negative kind, which compels us to regard them as mere coincidences. Take the case of zinc blende. One locality was quoted where this mineral is a sure sign of a generous amount of gold and silver in the ore. The Morgan Mine, in Wales, affords, I understand, corroborative testimony. At the East Murchison Mine, in West Australia, this mineral has been found to be an almost unerring guide in separating rich from poor ore. But in Arizona it is a common experience that the impoverishment of lodes in depth, when it does occur, is concomitant with an increasing percentage of zinc. Other regions echo this unpleasant fact. Broken Hill knows it. Similarly, there is the beautiful mineral fluorite or fluorspar. The association of fluorite with the tellurides of gold was early recognised in both the Boulder and Cripple Creek districts of Colorado, and the purple tint imparted by this mineral was speedily hailed as a distinction peculiar to rich veins. Later experience, notably in Park County, has proved that poor ores are favoured with fluorite no less than the bonanzas. I have mentioned a locality where rhodochrosite is esteemed a favourable mineral. But while it is thus characteristic of rich ore at Rico, in Colorado it is a negligible factor in certain lodes at Butte City, Montana. Again, consider calcite. When it is seen amid the gold bearing quartz of California it is recognised with regret, because it so often means a falling off in values, while at Kalgoorli the same mineral charac-

* Dana mentions that crocoite is associated with gold in the quartz of Nizhni Tagilsk in the Urals.

Digitized by Google

terises ores rich in calaverite (the telluride of gold), and at Rhuda in Transylvania, a very valuable gold vein has been worked whose matrix was essentially calcite.,

We are all familiar with mines in which iron pyrites is so intimately associated with the gold that a lessening of the one means a diminution in the other, but there are also cases where an excessive percentage of pyrites coincides with impoverishment. Moreover, there are lodes in which the coarse cubes of pyrites are less favourable to the presence of gold than the finely crystalline variety, but there are also those in which the reverse is true. Much in the same way, there used to be an idea that coarse cubical galena was less silver-bearing than the fine grained kind, but this as a generalisation has long since been exploded. Thus, therefore, it requires but little sifting of this sort of evidence to emphasise its contradictory character.

The rich lodes of the same district frequently differ widely in their mineralisation.* Poor veins often carry the ores considered characteristic of the rich ones. The neglect of the former causes this fact to be overlooked. When the field of comparison is enlarged from mines to whole districts the divergence of evidence becomes tenfold emphasised.

In matters like these the experience of each mining engineer is a personal equation by which every theory must be eventually tested. Out of the whole sad wreck of glittering generalisations on this particular subject, only one or two have survived my own particular trial of them, and even they, I fear, await the destructive testimony which may at any moment be found in the development of new mining regions. When gold occurs in pyrrhotite ores it has been as yet invariably proved to be in immediate association with a small, often overlooked, percentage of copper pyrites. The testimony of Montana, Colorado, and British Columbia is at one in this deduction. Again, while many veins carrying coarse gold encased in white quartz persist to great depths, and in this respect Bendigo does especially set at naught the dictum of American experience, nevertheless I have not known gold quartz to be persistent when wholly barren of the sulphides of the baser metals, while, on the other hand, I do remember innumerable examples of ore quite destitute of pyrites, galena, and blende which proved particularly short lived. I might venture

* This word is not of vulgar coinage. It comes through the French, who use it as we do, to express the fact that a rock carries minerals of economic value, that is, ore. "Mineralisé" is the equivalent of "mineralised," and is related rather to the word "minerai" (ore) than to "mineral."

Digitized by Google

one other. There is no better indirect evidence of the size of a body of gold ore than uniformity in the distribution of the gold. A patchy occurrence is less likely than homogeneity to indicate continuity or size; samples which vary between narrow limits are more encouraging than those which swing between wide extremes of richness and poverty. It is with a desire to avoid a merely destructive attitude that I have dared to offer these three observations.

While therefore the evidence in support of the value of the supposed indicative minerals is, as we have seen, of a very contradictory nature, it also has another feature which must not be overlooked. At its best, the aid of these minerals would be delusive, because, even if it proved the invariable association of gold with particular minerals, it could not predicate the actual amount of that gold. That a lode should carry gold is quite insufficient to the mining engineer, whose operations for its profitable extraction require that it should be there in paying quantity. This is the difference between science and business. The union of the two creates an industry. One might discuss in a learned and entertaining manner, as Stelzner has done, the suggestiveness of the association of gold with such a compound as the silicate of boron and aluminium (tourmaline), because it indicates a deep-seated origin. The presence in notable quantity of the fluoride of calcium (fluorspar) might prompt speculations of a vapourous and corroding kind. But the proof of gold having either a profound or a gaseous origin, were it attained by the geologist or chemist, would not permit the mining engineer to infer that the gold persists in *paying* quantity to any particular depth. An ore which carries 2 dwt. per ton in a region where the conditions are such as to require the equivalent of 15 dwt. to be expended in the extraction and reduction of a ton, is to all practical intent as valueless as one which is wholly barren.

The question of indicative minerals bears many points of resemblance to that of the plants which have been observed to distinguish the soil enriched by particular ores. The *Viola lutea* was supposed to be peculiar to the soil covering the zinc deposits of Westphalia, and was subsequently recognised growing on the outcrop of the zinc ores of the Horn Silver Mine in Utah. It became known as the "zinc plant." Similarly there is a so-called "lead plant," the *Amorpha canescens*, which characterises the lead deposits of Michigan, Wisconsin, and Illinois. These plants are local varieties rather than a distinct species, their colour being affected by their absorption of the particular metallic ingredient in the

Digitized by Google

soil.* Their occurrence has long ceased to have anything more than academic interest.

If then we cannot accept the belief that certain minerals are indicative of the plentiful occurrence of gold, what shall be said for the idea that they give an assurance of persistence in depth? Every one has read serious statements to the effect that this or that mine was of undoubted value because its ores contained particular minerals, the presence of which promised that the vein would increase in richness in depth. In young mining regions such ideas find a fertile soil. In West Australia the finding of tellurides in an ore is now generally considered to permit of the inference that the lode will go down to a great depth. The early discoveries of extraordinary pockets of native gold in veins of white quartz, such as made the Londonderry famous, proved sporadic and bunchy to a distressing degree. When, therefore, the telluride ores of Kalgoorli became recognised, and were found to occur in bodies of magnificent size and very satisfactory persistence, the conclusion was jumped at that if tellurides were only present in an ore, continuity in depth became thereby guaranteed. *Post hoc, ergo propter hoc.*

In these matters a very small portion of ascertained truth is swamped amid a mass of supposition quite unworthy of the name of theory. A theory embodies an underlying principle of universal application. The idea which to-day dominates the mining of Westralia is a vain imagining, delusive as a promoter's dream.

Those who are acquainted with the history of the mining of tellurides need not be told how ill founded is the statement that these particular minerals characterise lodes of peculiar permanence. The combinations of tellurium with gold and silver have proved of notable commercial importance in three mining regions, namely, Transylvania, Colorado, and West Australia. There are other districts where the mining of them is an incident in the working of ordinary gold ores. Such is the case in certain localities in California, South Dakota, and the North Island of New Zealand. In none of these, however, have they been indicative of any special persistence in the richness of the veins, and their occurrence has been merely an added obstacle to the successful extraction of the gold.

It was in 1802 that Klaproth discovered the presence of a new element, tellurium, in the ores of Zalathna, and so led to the recognition of a large number of the compounds of that metal

* See "Indicative Plants," by R. W. Raymond, *Trans. Amer. Inst. of M.E.*, vol. xv, p. 644.

Digitized by Google

with gold and silver. Zalathna, Nagyag, and Verospatak were gold mining centres when Transylvania was the Roman province of Dacia and was ruled by Trajan. The very complex ores of these districts have been a puzzle to the metallurgists of many generations. The veins penetrate young volcanic rocks (andesites) and Tertiary limestones, sandstones, and conglomerates. This very ancient mining country exhibits to-day a very forceful example of impoverishment in depth, while the refractory character of the ores has tried the resources of the smelting establishments of Schemnitz, Zalathna, and Freiberg.

In Colorado the tellurides were recognised as early as 1874 in Boulder county, more especially at the mines of Magnolia, Salina, and Sunshine. An experience of nearly twenty-five years has proved to the miners of that county that these ores occur there in comparatively small bodies of remarkable richness but of very irregular and uncertain behaviour. In two other districts of the same State, namely, in Hinsdale county and amid the La Plata mountains, valuable mines, carrying ores rich in the tellurides of gold and silver, have been worked during the past ten years, but their record corroborates that of Boulder. There remains the more important goldfield of Cripple Creek, where veins penetrating a remarkable complex of volcanic rocks have proved so persistently rich to a depth now approaching one thousand feet, that they have obliterated the reputation which this class of ore won in the three older parts of the same State.

In West Australia tellurides are being mined in three localities —Redhill, Bardoc, Kalgoorli—and the wonderful development of the last has given a new impulse to the whole industry of the colony.

Thus, one hears much of Cripple Creek, and, lately, of Kalgoorli. In both districts very rich lodes, characterised by telluride ores, have been opened up, with results so eloquent as to silence the story of the more numerous localities where these particular minerals have been only a metallurgical obstacle associated with ore bodies of no satisfactory continuity. As a consequence, investors are prepared to swallow the rhetorical confectionery of an irresponsible press, and to believe that a new era has dawned for any neglected region in which these tellurides are now for the first time recognised. Believe me, the compounds of tellurium are far more widely dispersed in gold ores than is generally supposed. I have detected them in several mines when a low extraction in the stamp mill suggested an unusual difficulty in the ore, and it is certain that during the next few years the greater familiarity with these minerals will lead to their recognition in

Digitized by Google

so many unsuspected localities, that they will cease to be a mineralogical curiosity.*

The idea, now very prevalent, that at Kalgoorli especially the presence of tellurides guarantees persistent richness is contradicted by several facts, the most notorious of which should be the fact that the very mine in which they were first recognised (by Mr. J. C. Moulden, in May, 1896), and subsequently acclaimed by the local press as heralding sure prosperity, has proved unprofitable; indeed, the particular ore-body in which the first telluride was seen has been demonstrated by later development to be an isolated patch leading to nothing of any moment. Moreover, the lodes at Kalgoorli vary in the amount of tellurides which they carry without any proportionate difference in their richness. The gold occurs not only in chemical combination with tellurium, but also in its ordinary native condition. Further, tellurides occur which do not contain gold. The so-called "black tellurium" of certain mines is the rare telluride of mercury, called "coloradoite," from the locality of its first discovery. Native tellurium also exists. Again, some of the veins even below the zone of oxidation are so free from tellurium as not to differ from ordinary gold-bearing reefs. Yet there is no reason to suppose that these are less rich or less persistent than those which are characterised by a notable percentage of tellurides.

It is not too much to say, therefore, that the observations gathered from the working of telluride ores in various parts of the world refute the idea that their occurrence has any particular bearing on the question of persistence in depth; while, on the other hand, experience has frequently demonstrated that their presence is an important and objectionable factor from a metallurgical standpoint, because it increases the cost of gold extraction.

Thus we are brought to face the general question of the enrichment of ores in depth. It is, however, outside the scope of this contribution. As a far-reaching fallacy, persisting in spite of the accumulated experience of many mining regions, it possesses a pestilent vitality, which must at times astonish those who from the actual direction of mining operations have seen so much evidence to the contrary. I am referring now to gold mines only,

* The sulphide ore of Mount Morgan, Queensland, carries tellurides. The fact was recently determined by Mr. E. S. Simpson, Government Assayer for West Australia. How much of the early trouble in the treatment of the oxidised ores is explained by this discovery! It also recalls to me the resemblance between the dull brown gold of some of the Mount Morgan ore and that of the first discoveries at Cripple Creek in 1892.

Digitized by Google

because the facts relating to baser metals, which by oxidation become soluble, differ in detail. Gold and tin are in this respect unlike copper and silver. While, therefore, I do not wish on this occasion to reopen the whole subject, I cannot forbear referring to the question as it has come up for discussion in West Australia, where I have lately been.

In that country the assertion is made with tiresome iteration that veins become richer below the water level, because in the oxidised zone the ore has been impoverished by the leaching out of the gold. It is also held by many who pose as having authority and not as the scribes, that if the outcrop give evidence of notable mineralisation it is reasonable to expect almost barren quartz to become valuable when the sulphides are reached in the ordinary course of deeper mining. If these pleasant doctrines are questioned, you are bidden to go to Kalgoorli, where, so they say, you will be forced by the evidence there obtainable to admit the fact that lodes which now attract the attention of the financial world, were too poor to meet expenses until the mine workings penetrated into the unoxidised ore. Indeed, at Kalgoorli especially this idea has a strong hold, especially among stock-jobbers.

The matter seemed to me to be one of great interest. If the facts really did indicate a general enrichment of the veins as they approached the drainage level of the district, which is also the water level of the mines, then Kalgoorli offered a striking exception to the experience of other goldfields. If, moreover, a satisfactory theory were forthcoming to account for these unusual facts, then the uncertain chemistry of ore occurrence would receive invaluable aid. But the prettily coloured bubble was dissipated as soon as an earnest investigation was commenced. The history of the development of the lodes, and a few quiet conversations with the able men who have come from elsewhere to direct the big mines, were sufficient to stamp this as another resurrection of a fallacy that was old before the Phœnicians came to Cornwall.

To say that mines get richer in depth is, in such a region as West Australia, a cruel cynicism. If anyone is inclined to believe it, let him wander over the desert, and count the idle stamp mills which lie rusting in the sweltering sun, and the long succession of abandoned shafts which now serve only to water the passing camel train. By mere repetition of an untruth you may effect persuasion, but you do not alter the falsity of it.

If you omit the manifest failures and turn to the production of

Digitized by Google

the more successful mines in the Menzies, Murchison, Coolgardie, and Norseman goldfields, you will still find that it is a work of supererogation to attempt a serious discussion of the statement that the veins have improved in depth. Incomplete as the Government statistics are, and vitiated by a total lack of system in the determination of the actual tonnage treated at the mills, yet they, too, tender an emphatic denial.*

The alleged facts are further explained by a general hypothesis that the gold in the oxidised ore has been leached out so that it is beneath its normal richness, which will be found unimpaired below the water level. This is stated to be evidenced by the removal of the iron pyrites, the casts of the crystals of which now appear as cavities in the quartz. In some of these gold is found, but in others it is absent, proving, so it is said, that the gold has been removed from the cavities which are now empty. The occurrence of films of fine gold, called "paint gold," on the faces of fractures is instanced as an illustration of secondary reactions. Finally, the alkaline composition of the waters in the mines is quoted in proof of their solvent power.

Although the chemistry of the oxidised zone is far from being thoroughly understood, yet in its incompleteness it is sufficient to disprove these arguments. When iron pyrites is decomposed the sulphide becomes a sulphate, and this in turn, by further oxidation in the presence of water, is resolved into sulphuric acid and the hydrated oxide of iron. The native sulphur frequently seen in the cavities left by the removal of the cubes of pyrites is not a direct product of decomposition, but is traceable to later secondary reactions in which the organic matter of the surface has served as a reducing agent. The gold intimately mixed with the pyrites, and probably originally deposited with it, remains, because the noble metal is insoluble to the waters which dissolved the iron.

The occurrence of gold in pyrites is now less of a mystery than it used to be. Microscopic examination has disclosed the existence of the gold in the planes of the pyrites, and the leaching of the gold by cyanide solutions without any apparent deformation of the pyrites is no less suggestive. It is indeed true that in some of the casts, left by the removal of the sulphides gold does not occur, but this is frequently due to the fact that it is very difficult to break a piece of cellular quartz without shaking the gold out of the cavities in which it lies loosely. Hence their emptiness

* Of course the grand totals are misleading, since they include the production of new mines, and do not indicate the shutting down of unprofitable ones. The yields of individual mines must be consulted.

Digitized by Google

may mean nothing. At other times this may indeed be due to the real absence of the gold, and against this observation we then balance another, namely, that the pyrites as we find it unaltered below the water level also varies in its gold contents, so that in the same vein it is sometimes barren and sometimes rich, accounting in this way for the uncertain presence of free gold in the oxidised zone. The "paint gold," frequently noticed in the gossan, appears to be the result of secondary and comparatively recent reactions. It is, however, only a proof of precipitation, and therefore presupposes a previous leaching, but not necessarily in the vadose region. It evidences local enrichment rather than impoverishment.

Of the solvent power of surface waters upon the gold there is only supposition, and this supposition must first overcome the fact of the occurrence of such organic matter in the ground approaching the surface as would reduce any known salts of gold should they be in solution. In the Sugarloaf Mine, near Kunanalling, I saw the roots of trees at 74 ft., and in the Great Boulder Main Reef Mine, at Kalgoorli, I saw some which had penetrated the rock to 85 ft. below the surface. In the former case the oxidation of the enclosing rock ceases at 130 ft. and in the latter at 175 ft. The region is an unusually dry one, which has undergone erosion with extreme slowness; and this is doubtless the reason why roots in search of moisture should penetrate so deeply.

The waters of the mines are all brackish; they are many times more salt than the sea. Analyses made at the Great Boulder Proprietary Mine show an average in solids of 8·9 per cent., and of this 6·2 was chloride of sodium, 0·45 chloride of magnesia, and 0·73 sulphate of lime. The water from the Lane shaft gave the maximum of 11·9 per cent. solids, containing 8·8 NaCl, 0·51 $MgCl_2$, and 1·1 $CaSO_4$.*

Certain results obtained in the treatment of the zinc precipitate in the cyanide works of the Associated Mines have led the mill manager, Mr. Grayson, to deduce the solubility of gold in sulphuric acid when tellurium oxide is also present, and thus to offer a chemical theory for the alleged leaching of gold in the surface ores. This explanation, as it stands, is questionable, because the solubility of gold under the stated conditions is not known. When, however, free chlorine is also present such solubility would occur.† The telluric oxide, in the presence of salt and sulphuric

* For these figures I am indebted to the courtesy of Mr. Richard Hamilton, the mine manager.

† As pointed out by Mr. Richard Pearce, in a recent letter to the writer.

Digitized by Google

acid, would take the part given in the laboratory to the black oxide of manganese. The occurrence, therefore, of waters rich in chlorides, of sulphuric acid derived from decomposing pyrites and of tellurium oxide obtained from the oxidation of tellurides, are all recognisable amid the conditions at Kalgoorli, and thus afford a theory which, while it has no very strong evidence to commend it, is at least tenable from a chemical standpoint.

In many cases the supposed enrichment in depth can be easily explained. For example, a shaft passes, in course of sinking, from poor into rich ore. The lode, it would appear, has become better in depth. The fact is, that the shaft was started off the oreshoot, which has a pitch such as to bring it across the line of the shaft at a certain level. The accompanying diagram will illustrate this point.

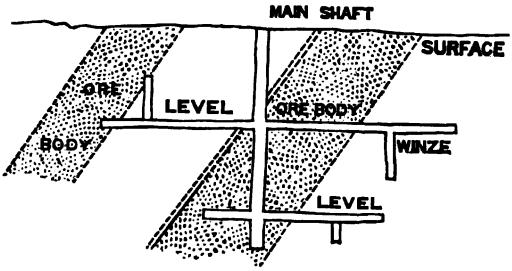


It would be just as reasonable to argue that the ore occurred in vertical bands because the levels pass in and out of the shoots. In another suggestive instance a vertical shaft was sunk in a very wide lode which is not quite perpendicular. The shaft was started on the hanging wall side, where the ore is now known to be always poor, and in depth it approached the footwall, where the lode is richest. It was assumed, for a time, that an enrichment in depth characterised the lode. The sketch (p. 206) will explain this occurrence.

The idea of general enrichment in depth at Kalgoorli arises from an ignorance of the history of the early development of the region. The discovery of the big ore-bodies was not made in the infancy of the district, but came in the wake of that preliminary digging which usually precedes systematic exploration. Patrick Hannan pegged out the first claim on April 12th, 1892. At that time nothing was known save the existence of a few superficial deposits on the flat overlooked by Cassidy Hill and Mount Charlotte. These deposits were of the kind termed "dry blowers' patches." They may be described as the alluvium of a waterless

Digitized by Google

country. Their substance varies. They may consist merely of a few inches of sand and clay lying on the decomposed rock surface, but elsewhere they may have a thickness of many feet,

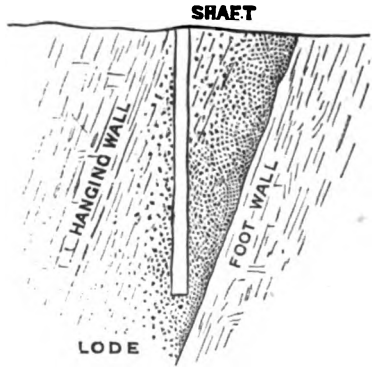


and include a lower portion which is so compact as to be called "cement." In the absence of the transporting power of running water, the wind has been an active agent in sifting the *débris* caused by that disintegration of the surface which is mainly traceable to the variation between the heat of day and the cold of night. The finer rock particles are thus separated from the larger fragments of hard quartz. And although the wind is but a feeble agent as compared with the mountain stream, yet, owing to the prevalence of the constant and violent draughts of a high plateau, such as the interior of West Australia, the sum of its activities during long periods of time is capable of producing noteworthy results. The miner imitates the ways of nature, and in default of sluicing he winnows the dirt by a process known as "dry blowing." The "dry blower" of West Australia is brother to the "gulch miner" of California and the "alluvial digger" of Victoria.

From the deposits which are thus accumulated gold has been extensively won, and occasional patches of extreme richness have been encountered. The heaviest gold is found resting close to the underlying rock surface, and therefore, as in ordinary alluvial mining, the working of these deposits often leads to the discovery of the veins from which the gold was shed. Thus many "dry blowers' patches" have been found adjacent to very valuable lodes, and in the case of the alluvium of the Kalgoorli flats there were found small veins which led to the first mining. This early mining was confined to that portion of the district which is

Digitized by Google

close to the present town of Kalgoorli, and which is distinct from the scene of the great mining developments of the past two years, 2 miles further to the southward. The veins found in this northern part of the goldfield were, as has been stated, small; they were also uncertain in behaviour, and generally poor. They served nevertheless as an excuse for the taking up of numerous leases and the subsequent flotation of mining enterprises of a thoroughly worthless kind. Not one of these veins has as yet become the basis of a successful enterprise, although they have been followed by very extensive workings. In the meanwhile the prospectors wandered further south, and found several rich patches of surface dirt and cement, which led directly to the discovery of one or two strong quartz croppings, on the evidence of which the Great Boulder and other claims now famous were pegged out. These quartz veins were larger than those previously worked in the northern part of the field, but they were similarly poor and uncertain, although this fact did not prevent the flotation of the Great Boulder Proprietary Company. The story of this splendid mine is typical of that of several of its neighbours. The first explorations were confined to a vein which outcropped in the eastern part of the lease, and the shaft sunk upon it is the one known as No. 3, or Gamble North's. The vein was soon proved to be of no importance, becoming thin and poor at a depth of 75 ft. A trench was then started to cut a big ironstone outcrop which forms a hillock behind the present office. This ironstone reef was found to contain only 12 dwt. of gold per ton, an amount too small for profitable operations at that time. When, however, the trench referred to was extended farther west it penetrated another vein which had no outcrop. This proved to be the eastern portion of the magnificent lode which subsequently gave such great value to the mine. It was rich from the start. A wide opencut now bears confirmatory evidence, and the least observant cannot help noticing that the stopes have been extended from the underground workings up to the daylight. The section afforded by the opencut exhibits the fact that 2½ ft. of cement form a cap over a lode nearly 20 ft. wide. The Great Boulder Perseverance had a similar beginning. The first work was done on what is known now as the old No. 1 Shaft, carrying a comparatively poor vein which was abandoned when the rich lode in the neighbouring Lake View Consols Mine was traced into the Perseverance ground. This lode, which gave the value to this company's property, also failed to outcrop. A big opencut now explains the reason to be similar to that noted in the case of the Great Boulder. The surface

Digitized by Google

workings on the Ivanhoe, Kalgurli, and other adjacent mines exhibit similar conditions—big lodes capped by cement and long lines of stopes breaking through into daylight.

In the meantime the extensive development of the goldfield has afforded an explanation for the chequered nature of the early explorations. It has been found that the quartzose lodes are uniformly poor, and that the rich ones have a chloritic and magnesian matrix which renders them susceptible to easy degradation and erosion. Thus it is easy to understand the current misunderstanding. The first veins worked were naturally those which had outcrops. They outcropped because they carried much quartz and were harder than the encasing country. They also happened to be poor; therefore the first attempts at mining were unprofitable. On the other hand the rich lodes had a composition into which the carbonates of lime and magnesia entered largely, rendering them softer than the rock enclosing them, and therefore they suffered erosion at least as rapidly as the surrounding country. The detrital deposits of the surface capped the tops of the rich ore-bodies, and it was not until an accidental exploration had pierced the cap of this "cement" that the first of the soft and rich lodes was uncovered. The discovery of the others followed in due course.

The idea of an enrichment in depth was based on the fact that the mines which were at first unprofitable became subsequently marvellous ore producers. Careless observation and that wishing which is father to much loose thinking served to bolster up an erroneous idea, and to spread the statement that the ore became richer at the water level. It is a matter which does not affect the reputation of the really good mines so much as that of the forlorn hopes, the poverty of which is excused by a lack of depth, thus leading directly to the spending of much money on the foundation of a fallacy.

From careful investigation and the sifting of much evidence I am forced to the conclusion that Kalgoorli is no exception to a common experience, and that where rare enrichments occurred in the sinking of a shaft, the fact can be traced to the structural relations of the ore deposits. I regret the conclusion. It would have encouraged those in other regions had there at last been found a district where nature had placed the best ore where man could with most difficulty reach it, and, apart from its economic aspects, the occurrence would have been one of great scientific interest.

Thus the tellurides, like rhodochrosite, tourmaline, zinc blende, pyrites and a host of other supposed indicative minerals, must be discarded as helps no better than the will-o'-the-wisp which leads

Digitized by Google

the wanderer into a morass worse than the darkness itself. Better no guide at all than a false one.

Shareholders and investors may be tempted to inquire whether I would go so far as to deny the possibility of veterans in the profession having such ability and experience as would permit them to come to safe conclusions as to the prospective value of a mine from a mere examination into the character of the ore. To this I would answer that I believe the most experienced, the very Ulysses among mining engineers, would be the first to emphatically disclaim such short cuts to the valuation of mines. A moil and a 4-lb. hammer are of more use than a book full of sounding theories; a careful sampling of the workings is of more immediate utility than a treatise on mineralogy. Successful mining must be based on facts; all the rhetoric and fond imagining in the world cannot alter them. It is the province of the mining engineer to determine the facts, to get alongside them, as Huxley would say, and when a theory comes floating by leave it, as Joseph left his coat in the hands of the harlot, and flee. Experience has proved that indicative minerals are delusive; so let them go. But the mineral contents of an ore, though they have no bearing on the mining, decide its metallurgical treatment, and therefore need careful examination. The importance of the character of the ore from this point of view is too often overlooked by those enthusiastic mineralogists who permit themselves to make the most sweeping deductions on matters of much greater uncertainty.

Careful sampling is worth a bushel of suppositions, and the painstaking determination of the working costs is better than any amount of geological generalisation. Mining is not a scientific pursuit, although at times it may to the observant have seemed to be either that or one big insanity. But mining is an industry. The good sense which financial men have of late years contributed to its operations has done much to bring it from a windy mistiness to the solid footing of sound business. The main purpose is not to develop the waste places of the earth, nor to spoil the scenery of the mountainous ones, but simply to win a profit by extracting ores out of the ground. It is a plain matter of profit and loss. On the one side is the value of the gold in the ore, and on the other is the cost of the processes needed to obtain it. To arrive at the former there is only one way, namely, to sample the workings systematically. The result will be reliable in proportion to the care taken. Any shirking of difficult places in the mine, any avoidance of hard portions of the vein, any assistance from untrustworthy hands, will vitiate the result. Against this



Digitized by Google

must be placed the costs of operation. Here it is that experience is needed. The sampling is largely mechanical, like ordinary assaying, and requires patience and care more than anything else. In the estimate of the costs there must be included many items of expenditure, such as the breaking of the ore, the development work, the equipment, the milling, the management; and to arrive at these the previous actual charge of mines is the only proper preparation. Then comes the question of the quantity of ore available or likely to become available by further exploration. This is the *pons asinorum* of mining. That which some describe as ore in sight is often really ore out of sight. The over sanguine estimation of ore reserves has ruined more enterprises than all the bad management and over-capitalisation of which complaints are daily made. It is ever a difficult matter and requires a cool judgment, wide experience, and a careful investigation into the circumstances and structure of each particular mine.

When the value and tonnage of the ore available have been arrived at, and when working costs have been determined, then the engineer has the greater part of the evidence needed to submit to the client whom he is advising. The other data which will influence an opinion are more variable in their character. The geological conditions may affect the distribution of the ore bodies and, consequently, the cost of mining, and the mineralogical composition of the ore may determine the expense of milling. As such they must not be overlooked, but the padding of a report with a large amount of geological disquisition, where it is not necessary to a comprehension of the facts of the case, is very nearly an impertinence, seeing that it is not expected that it will be understood by the person or persons for whose guidance the report is written.

In concluding this contribution I would express the hope that this paper may lead to a useful discussion. If there are any technical men who seriously entertain the idea of an enrichment in depth due to the leaching of gold in the oxidised ores, then it would be of much service to the industry if they would frame a defence and an explanation of views which daily experience must otherwise condemn as nonsense. Nor in denouncing one generalisation would I make the equally grave mistake of advocating its opposite, namely, that all mines must necessarily become poorer in depth. There may be causes, founded on geological structure, why a change in the value of the ore in a vein may take place in any direction, upward or downward, in dip or in strike, and it is an undoubted fact that there have been instances where the deepening

Digitized by Google

of the workings has led to the discovery of new ore bodies. Bendigo is a telling illustration.* The gold-bearing quartz occurs along the anticlinal axes of sedimentary rocks. In sinking, a succession of saddle formations is penetrated. No single one of these has any notable vertical extent, yet the series as a whole is wonderfully persistent. This explains why the last resort of a perplexed mine manager is to advise the sinking of the main shaft. At Bendigo the advice is well founded, but when the managers from this district go to West Australia and recommend deeper exploration every time they encounter poor ore, they do so without regard to the total unlikeness of the conditions. Again, it cannot be denied that in certain regions alternations of comparative richness and poverty appear to coincide with the penetration of the workings through successive zones of rock. The Gympie district is a case in point. There the veins cut through a series of shales, limestones, conglomerates, and sandstones, amid which there are several beds of black slate. The gold occurs in paying quantity only when the veins are traversing the slates. Every district deserves a study unbiassed by the record of its neighbours; each mine must be taken on its merits and inspected without prejudice. It is, however, one thing to examine a mine with the assumption that gold veins in general become enriched in depth, and it is quite another thing to recognise that while it may occur in a particular case, it is an expectation which experience does not justify. When, however, such enrichment or impoverishment does occur, experience suggests to us that its cause is to be sought for rather in the geological structure of the encasing rocks than in the merely coincident presence of certain minerals found associated with the gold.

---

## DISCUSSION.

**Mr. Mactear** said that there were one or two points which struck him in connection with the paper. He was pleased to hear Mr. Rickard's views about the telluride deposits in Kalgoorlie, which agreed almost precisely with those which he had himself formed more than a year ago, when he visited Western Australia. At the time of the so-called telluride boom, some 18 months ago, the theory was popularly held in Western Aus-

*See "The Bendigo Goldfield," by the writer, in vol. xx, *Trans. Amer. Inst. of Mining Engineers.*



Digitized by Google

tralia, and widely trumpeted abroad, that telluride was a sure indication of greater richness to come, and that there was no doubt whatever as to the ultimate position of the Kalgoorlie mines as being the greatest probably in the universe. He thought that, after what Mr. Rickard had so clearly put before them, the bottom had been knocked out of the telluride theory. He would like to know if Mr. Rickard could give them some recent information with regard to the results obtained at Kalgoorlie in the district to the north of the town site. The absence of water there seemed to be the great drawback; but as far as he knew, no veins of a really payable character had been found in that portion of the district, although an enormous amount of development work had been carried on, based on the view (which he believed to be erroneous) that if they only got deep enough they were bound to get rich material. He thanked Mr. Rickard for the clear and explicit statements he had put before them, and cordially agreed with most of his conclusions.

**Mr. S. Herbert Cox** said that when he came there that evening he expected that Mr. Rickard was going to tell him of some minerals that were indicative of the presence of gold. He had been disappointed, and found that the author knew no more about it than he himself did. There were, in fact, no minerals associated with gold-bearing reefs which were indicative of the presence of gold, and he thought that the members would agree with that statement. With regard to the improvement or falling off of lodes in depth, the mines of Western Australia, to which the author particularly referred, were none of them deep mines, the deepest being about 400 ft., and after reaching that depth he did not think there was any proof either that the lodes were improving or that they were falling off in value. It was true that in sinking shafts in the various ways Mr. Rickard had illustrated on the blackboard, they might get improvements in the class of the ore, or meet with a falling off, but he thought it might be safely put that if they started to sink on a mineral-bearing lode which at first was very rich, it was often likely to fall off the further they sunk. He took it that, as depth was attained, various shoots were passed through, and changes from poor to rich, and rich to poor, took place, and he did not think any definite rule or conclusion could be arrived at in the matter.

**Mr. Alfred James** said that, with regard to the presence of tellurides indicating richness, he remembered visiting some mines in Hungary where the people always insisted that where the ore was purple it was richest in tellurium, which they regarded as a

Digitized by Google

most favourable indication. Mr. Rickard would probably remember that in New Zealand they always insisted that in the big piles of *débris* where the stones were covered with red fungus the most gold was to be found. With regard to the presence of tellurium being a favourable indication in Hungary, it was no doubt more or less of a fact in certain districts, but he understood that Mr. Rickard's point was that one could not necessarily rely on such indications. At the same time the presence of such favourable indications would lead one to go ahead more rapidly than would otherwise be the case. With regard to the nature of deposits, he considered that the most patchy were those which occurred in pure white quartz. If they made a list of all the big mines, it would be found that the richest were those in which the gold occurred associated with base metals, such as sulphides, and he thought that the author should not be too hard on those people who, when they came across a deposit, associated with sulphides, containing gold, expressed a hope that they might be allowed to sink deeper and prove the deposit.

**Mr. Thos. Rickard** said that the author had stated in the beginning of his paper that mining in olden times was conducted by the rule of thumb. It appeared to him that perhaps the paper goes too far in the direction of making it the rule of the chisel and crucible, or rather, in assuming that mining valuation is mainly reducible to this, forgetting that, for the most part, it is not with already developed mines that the engineer has to deal and to advise upon, and not simply testing exposed ore-masses awaiting the sampler, but with ground whose value and capabilities have yet to be proved. His business, therefore, is to pronounce whether the chances of discovery are such, that in his opinion they warrant encountering the risks of the necessary expenditure. In such cases the engineer is driven to what may be called the deductive method, and the value of his opinion will depend on the right use of his observation and experience, so that, however much he may regret it, he is unable to discard the merely indicative and the merely symptomatic; he is, in fact, reduced pretty much to the rule of thumb. His work may be more or less scientific, more or less rational, but still, it differs very little from the rule of thumb.

**The President** thought that a certain amount of hopefulness was necessary in mining, and sometimes the people with the most hopefulness and least experience got on the best, but at the same time hopefulness alone, without some good reason to back it up, was not to be defended. It appeared to him that the definition

Digitized by Google

with regard to the indication of gold being present was that they came upon the indications at the same time as they came upon the gold; and it was in the absence of the gold that the indications were wanted. While the gold was there they were able to get along without the indications! The information the author had given them about the early developments on the Hannan's field was most interesting. Another matter of interest dealt with by Mr. Rickard was the question of tonnage, seeing that he cast a doubt upon the Government returns of the tonnage of many of the mills. Doubt had also been expressed with regard to the Companies' returns as to their tonnage, which made it difficult to get at actual figures.

Digitized by Google

# SEVENTH ORDINARY MEETING, 20th April, 1898.

Mr. WALTER McDERMOTT (*President*) in the Chair.

---

The Minutes of the previous meeting having been read and confirmed,

**The Secretary** read the following paper in the absence of the author :—

## "Notes on the Electrolysis of Argentiferous Copper."

By WILLIAM TERRILL, M.Inst.M.M.

THE impurities likely to be contained by the crude copper, of which the anode is made, and which it is desired that the deposited copper on the cathode shall be free from, are bismuth, antimony, arsenic, iron, nickel, lead, silver, and gold.

Of these antimony, arsenic, nickel, and lead are variable constituents, and may each be absent in certain cases, but bismuth, iron, and silver may be regarded as constant constituents.

There are two ways in which the presence of these impurities in the anode can affect the purity of the deposited copper.

1st. Mechanically, that is to say, particles of slime can be entrapped by the accumulating copper on the surface of the cathode.

2nd. Chemically, that is to say, by passing into solution in the electrolyte and becoming deposited electrolytically upon the cathode.

If the impurity of the cathode be caused mechanically it may be due to all or any of the impurities present, but if it be caused chemically, that is, by solution in the electrolyte, then all of them are not concerned, for nickel, gold, and lead may be regarded as innocuous.

Bismuth, antimony, arsenic, and silver can, however, be dissolved and electrically deposited upon the cathode.

Digitized by Google

Iron also can be dissolved by the electrolyte, and can act indirectly in the transference of other impurities by its power of taking up oxygen. Thus if the iron be present in the electrolyte as ferric iron, silver becomes transferred with facility; not so easily, however, bismuth, antimony, and arsenic; but if the iron be present as ferrous iron, then the bismuth, antimony, and arsenic can be easily transferred; but not so easily silver. It need scarcely be mentioned here that the strength of the current is also a factor in the transference of impurity, for it is well known that a weak current will better ensure a pure deposit than a stronger one.

These facts constitute the basis on which the conduct of the process should be regulated.

The imprisonment of particles of slime during deposition is brought about by the disturbance of the electrolyte either by moving the plates or by irregular rushes of the circulating liquor. The precautions needed to prevent it are simple and well known.

The electrolytic transference of impurity is not so easily prevented. The electrolyte will be sure in time to become surcharged with injurious impurities, and then they become deposited with the copper on the cathode.

Several methods have been tried from time to time with a view to purify the liquor, and these chiefly depend upon oxidation, whereby the *bêtes noirs* bismuth and antimony become precipitated.

One plan is to force air through the liquor which is collected in the supply tank, and another to let the liquor fall in a long and broken stream through the air in its way from one reservoir to another, and many other such devices for the aëration of the liquor have been tried.

The same precipitation is brought about by passing a stream of chlorine through the liquor, or even by adding *bleach* to the liquor itself.

The greatest drawback to all these plans is that the iron thus becomes peroxidised, and, while it is in that condition, the silver becomes dissolved and largely transferred to the cathode plate. It also allows the copper of the anode to be dissolved by the free acid of the liquor, with the result that the electrolyte becomes richer in copper and poorer in free acid than is found to be compatible with the best results.

Another objection to any method of oxidation is that it cannot be perfect, and the good effect is but transitory, for the purified

Digitized by Google

liquor becomes rapidly impure again, and a time will come when the cure fails to be effectual.

Another method is to heat the liquor during its transit outside the electrolytic vats, and this is sometimes accompanied by an aëration; but it is subject to the same objections as the other cases.

It would seem, therefore, that the only way to ensure a constant production of good quality copper will be to discard the electrolyte when it becomes impure and replace it with a new solution.

Then how to deal with the discarded liquor.

Of course the copper can be precipitated by iron and so recovered, but this would be wasteful alike of iron and of the free sulphuric acid of the liquor. Or it may be *gassed* with sulphuretted hydrogen and the copper, &c., precipitated as sulphides. The liquor will then retain its free acid and can be used over again, but the iron and nickel will accumulate with a doubtful disadvantage.

It is, however, a tedious and expensive method. A much better plan will be to evaporate the liquor until the bismuth is mostly precipitated, giving a rich deposit of bismuth oxide which can be easily reduced to metal, then to saturate the free acid with copper oxide in the usual way, and crystallise out the sulphate of copper for use in making the new baths. Much more sulphate of copper will be obtained, however, than will be needed for the electrolytic process. So what is suggested here is that the manufacture of sulphate of copper shall run concurrently with the electrolytic process.

It is of importance that it shall be easily known when the liquor has become so impure that it would be dangerous to the quality of the deposit to continue its use, so that it may be employed up to that point and then at once discarded.

To wait for this information until it is given by the deposition of impure copper on the cathode is on the face of it unsatisfactory, and the value of a test that will give earlier information must be apparent.

Such a test is a drop of bromine water. Experience tells us that a new bath will work for a long time, even with a very impure anode, and continue to give good cathode copper. Then all at once the quality of the deposit changes, bad copper only being henceforth deposited.

Full notice of the approach of such changing point is given by the production of a white cloud in the liquor within about a minute after the addition of a drop of bromine water. When the

Digitized by Google

changing point has actually been reached the production of the white cloud is almost instantaneous, but the cloud will appear, although slowly, quite 48 hours before any danger has been incurred. A daily test of the solution, therefore, is all that is needed to ensure a continued production of good copper.

This cloud is due to the presence of the ubiquitous bismuth; and since bismuth goes into solution more readily than the other injurious impurities, this test becomes a sure indication of the safety or otherwise of the circulating electrolyte.

## DISCUSSION.

**Mr. J. H. Collins** thought the paper was a very useful one, but, in his opinion, there was an error running through it, as the author assumed that bismuth was always present in the copper liquor. As far as liquors containing bismuth were concerned, the paper was quite correct, but bismuth was not always present, and it was well known that a great deal of electrolytic copper was being produced from bars that did not contain a trace of bismuth; and in such a case the test mentioned by the author would fail, as bromine would not show a cloud on any of the other metals.

The following paper was next read by **Mr. Alfred James** (Member of Council) in the absence of the author:—

Digitized by Google

# "Some Notes on the Recovery of Gold from Cyanide Solutions."

By Sherard Cowper-Coles, Assoc. Inst.M.M.

One of the chief difficulties appertaining to the economical recovery of gold from weak cyanide solutions by electrolysis has been the electrodes.* If several lead anode sheets are cut superimposed, the strips cling together, and have to be carefully spread out one by one, so that the surface may be exposed to the solution. A clean-up is made every seven or eight weeks, when the wood frames carrying the lead strips are withdrawn, the lead strips removed and new substituted, the auriferous lead being ultimately melted down and conveyed to a central works to be cupelled. This method is both crude and expensive; the labour of fitting the strips into the frames is considerable, and the consumption of lead is a considerable item, having been computed by Mr. Von Gernet at the Worcester mine at 1·10 of a penny per ton of ore treated, and by Mr. Williams, at the Crown Reef Gold Mining Company, at 1·75.

The cathode should fulfil the following conditions:—

I. The gold should be adherent during the process of deposition.

II. The gold should be capable of being readily stripped after removal from the electrolysing cell.

III. The cathode should be electro-positive to the gold in solution, to ensure the cathode being coated with gold on immersion.

These conditions are fulfilled, I find, by substituting an aluminium cathode for a lead one, advantage being taken of the fact that a loose film of oxide is very rapidly formed on aluminium, the difficulty in soldering and electro-plating aluminium for this reason being well known. The substitution of aluminium for lead foil, or strip, enables the gold to be obtained as pure gold, and daily returns to be made of the amount of gold

* The cathode is usually lead, and the anode iron, but in Mr. Andreoli's process he has reversed the order, the anode being peroxidised lead plates, and the cathode iron.

Digitized by Google

recovered; it also has the additional advantage of reducing the cost of labour and economising the amount of cyanide of potassium used, as the solution is not contaminated by any base metal such as zinc. The deposition of gold from a cyanide bath on to an aluminium plate proceeds in a uniform manner, but in such a way that the gold is deposited as a metallic sheet, which is easily detachable, when desired, from the aluminium cathode by stripping, or peeling, or rubbing almost as soon as it is formed, and if the aluminium cathode consist of a sheet of the metal fixed to a revolving drum or cylinder, by varying the rate of rotation the film of gold can be brushed or removed from off the cathode continuously, so that the process is an automatic one, resulting in the immediate and continuous recovery of the gold without any subsequent cupellation of the lead as in the older electrolytic process.

The process has therefore in it the elements of economic working, coupled with the quick recovery of the valuable gold. In the Siemens-Halske process, the lead cathodes remain some weeks in the bath, and the gold, which only then amounts to about one-tenth the weight of the cathode, is only recoverable therefrom after a second further operation of smelting and cupellation. In the Siemens-Halske process, lead was chosen as the cathode, as it has the property of allowing the gold to adhere to it. In the aluminium process, aluminium is used as the cathode, as it permits of the easy removal of the gold film. In the former process the gold has to be won from the lead by a secondary operation; in the latter the gold is directly obtained in the form of a pure foil without any further expense or trouble. Gold by this process has been successfully extracted from cyanide solutions containing only 0·01 per cent. of cyanide of potassium and $2\frac{1}{2}$ dwt. of gold to the ton of solution. The best results are obtained when the solution is raised to a temperature of about 100° F. It is also found advantageous to use a greater current density with the necessary increased voltage when the aluminium plates have been freshly placed in the solution, so as to ensure their being covered with a film of gold as quickly as possible, otherwise there is a tendency for aluminium hydrate to be formed. In about 10 hours an extraction of 95 per cent. was obtained by the use of aluminium cathodes, the amount of gold in solution before electrolysis being $2\frac{1}{2}$ dwt. to the ton of solution, and the strength of cyanide 0·01 per cent., and the rate of flow about 15 gallons per 100 hours for every cubic foot of electrolysing cell, or three square feet of cathode service. Gold has been deposited on

Digitized by Google

aluminium cathodes from solutions containing only 0·0075 per cent. of cyanide of potassium, the current density per square foot being 0·03, and the E.M.F. at the poles of the generator 6 volts.

The following are the results obtained from gold cyanide solutions of varying strengths with aluminium cathodes and iron anodes:—

*First Experiment.*—A cyanide solution containing 3·2 grams = 2 dwt. gold per gallon and 22·71 grams per gallon of potassium cyanide, or 0·5 per cent. solution, was electrolysed. The aluminium cathode had an area of half a square foot, and two similar sized iron plates formed the anodes, placed $1\frac{1}{4}$ in. from the cathode, the amperage being 1·50 and the voltage 1·40 at the terminals of the electrolysing cell. The gold began at once to deposit on the aluminium cathode as a bright coherent coating, and the deposition was allowed to continue for 15 minutes, when the amperage was found to be 2·0 and the voltage 3·40. The layer of gold could be completely and easily detached by rubbing gently with a piece of indiarubber tubing fixed on a glass rod.

A fresh cathode was then inserted.

| | P.M. | Amperes per sq. ft. | Volts. |
|---|---|---|---|
| Time of immersion .. | 1.05 | 3·10 | 4·40 |
| Taken out .. .. | 1.20 | 3·20 | 4·60 |

The gold was removed from this cathode, and a fresh one inserted without changing the conditions.

| | P.M. | Amperes per sq. ft. | Volts. |
|---|---|---|---|
| Taken out .. .. | 1.50 | 2·60 | 4·70 |

As gold still continued to be deposited, the experiment was continued.

| | P.M. | Amperes per sq. ft. | Volts. |
|---|---|---|---|
| Time of immersion .. | 2.20 | 2·80 | 4·70 |
| Taken out .. .. | 2.55 | 2·60 | 4·80 |
| Time of immersion .. | 3.0 | 2·30 | 4·60 |
| Taken out .. .. | 4.0 | 2·20 | 4·90 |
| Time of immersion .. | 4.15 | 2·60 | 4·90 |
| Taken out .. .. | 5.15 | 2·00 | 4·90 |

The whole quantity of gold recovered in these six experiments

Digitized by Google

was well washed to remove traces of potassium cyanide, and then weighed.

| | Grams. | Per cent. |
|---|---|---|
| Gold added .. .. .. | 3·200 | 100 |
| Gold found .. .. .. | 2·7108 | 84·70 |

It will thus be seen that 84·70 per cent. of the total gold was recovered from the solution in 3 hours 35 minutes, using an average amperage of 2·51 per plate, or a current density of 5·02 amperes, and an average voltage of 4·63.

*Second Experiment.*—In this experiment a weaker solution of potassium cyanide, containing 11·35 grams per gallon = 0·25 per cent. solution, was employed. The percentage of gold was nearly doubled, viz.: 91 grains = 5·94 grams = 3·80 dwt. per gallon.

The experiment was divided into two portions, the yield of gold at each stage being determined.

| | | Amperes per sq. ft. | Volts. |
|---|---|---|---|
| 1st Stage—Time of immersion .. | 11.15 A.M. | 3·00 | 4·75 |
| Taken out .. .. | 1.05 P.M. | 2·00 | 5·10 |
| 2nd Stage—Time of immersion.. | 1.20 „ | 2·10 | 4·90 |
| Taken out .. .. | 3.40 „ | 2·00 | 4·80 |

The experiment had to be discontinued at this stage, owing to a short-circuit taking place within the cell.

The gold recovered :—

1st Stage, in 1 hour 50 min. 3·005 grams = 50·59 per cent.
2nd Stage, in 1 hour 20 min. 0·875 gram = 14·73 „

A total quantity of gold amounting to 65·32 per cent. was therefore recovered in 4 hours and 10 minutes, although it will be noted that the greater part of the gold was deposited in the first two hours.

*Third Experiment.*—A solution containing 6 dwt. of gold per gallon and 32·71 grams of potassium cyanide, being a 0·5 per cent. solution, was employed.

The gold was deposited in three stages and weighed separately, as follows:—

| | P.M. | Amperes per sq. ft. | Volts. |
|---|---|---|---|
| 1st Stage—Time of immersion .. | 5.30 | 6·25 | 4·30 |
| Taken out .. .. | 6.0 | 5·20 | 4·10 |

Gold deposited, 2·930 grams = 32·02 per cent.

Digitized by Google

| | P.M. | Amperes per sq. ft. | Volts. |
|---|---|---|---|
| 2nd Stage—Time of immersion .. | 6.12 | 4·80 | 4·10 |
| Taken out .. .. | 6.45 | 4·20 | 4·30 |

Gold deposited, 1·340 gram = 14·68 per cent.

| | P.M. | Amperes per sq. ft. | Volts. |
|---|---|---|---|
| 3rd Stage—Time of immersion .. | 6·55 | 2·20 | 2·30 |
| Taken out .. .. | 8·45 | 2·10 | 2·30 |

Gold deposited, 2·055 grams = 22·46 per cent.

69·13 per cent. of gold was thus recovered in 3 hours 33 minutes, and the greater part was also deposited in the first half-hour, viz.: 32·02 per cent.

These experiments demonstrate that the process affords a quick method for depositing gold from its cyanide solutions, and also show that it is easy to remove the film of metallic gold from the aluminium cathode by mechanical means.

In another experiment some gold tailings were carefully assayed, and found to yield a button of gold equivalent to 1·4 gram gold per 1000 kilograms, or, approximately, 1 dwt. per ton.

The quantity of tailings used for the experiment was 90 lb. This quantity was placed in a suitable vat and treated by the well-known methods for extracting the gold by means of a cyanide solution. The tailings were first leached with a weak caustic soda solution containing 4 oz. caustic per ton of water, and after its removal, a cyanide solution containing 0·5 per cent. KCN was added. This solution was allowed to leach the tailings for several hours, and was then drawn off into an electrolytic vat. The tailings were then leached dry for some hours, in order to ensure the complete solution of the gold, and the double cyanide so formed was leached out with a weak cyanide solution containing 0·18 per cent. KCN. After this solution had been drawn off into the electrolytic tank the last traces of the gold solution were washed into the vat with water. The time occupied for the whole operation was 50 hours, so that it represented the same time as is used in actual practice on a commercial scale. The total amount of liquors obtained in this way and submitted to electrolysis amounted to about 50 litres, or about 11 gallons, or about half the weight of the tailings treated.

From the above assay the theoretical quantity of gold which should be extracted from the above weight of tailings is 0·056

Digitized by Google

gram, or $\frac{1}{30}$ of a dwt. On submitting the solution to electrolysis a current of 0·29—0·31 ampere was employed, at a pressure of between 6 and 7 volts. As the area of the aluminium cathode was approximately one square foot, the current density corresponds to the amperes. The electrolysis was allowed to proceed for seven hours, and at the end of that time the gold was seen covering the whole of the cathode as a very bright golden deposit of extreme thinness. Notwithstanding the thinness of the film, it was found possible to detach it mechanically.

## DISCUSSION.

**The President** said that the paper was a fruitful one for discussion, as it touched upon the question of precipitation of gold from cyanide solutions, on which a great deal had been done of late, and they had several members present who could speak with authority on the subject. He hoped to hear whether anything had been done on a practical scale as regards the use of aluminium. The suggestion in the paper was not a new one, but was simply a reference to experiments which had been made to see how far it could be successfully carried out on a small scale.

**Mr. T. H. Leggett,** replying to the President's question, said that as far as he was aware, no work had been done along the lines indicated by Mr. Cowper-Coles, in Johannesburg, although it was very difficult for a consulting engineer on the Witwatersrand Fields to keep track of the work being done by the progressive chemists of that mining district; hence, it was quite possible that some similar experiments might have been made, but thus far such had never got outside of the laboratory. He thought that an original investigation of this kind should certainly be encouraged, and that such members as Mr. Cowper-Coles deserved the thanks of the Institution, for, while one profited much by the descriptions and discussions of known methods, the introduction of new processes discovered by this class of investigators was of great value.

He noticed that in two of the three experiments made by the author, the solutions contained 0·5 per cent. of cyanide, an amount which would be out of the question in working on a large scale upon any such grade of material as the Rand tailings. In the author's second experiment, where the strength of solution used more closely approximated, in that particular, to the Rand

Digitized by Google

practice, an extraction of 65 per cent. was obtained, and this, as is well known, is already exceeded by the methods of treatment and precipitation now in use there. On the whole, he thought it was rather premature to criticise the author's experiments, as they appeared to be of a tentative character, and not sufficiently numerous or varied to enable one to form a definite conclusion therefrom. If it should be found that the use of aluminium would not vitiate the solutions, upon which point the author had not given much information, then it would certainly be desirable to follow up these experiments by a more detailed and varied series of similar ones.

**Mr. Alfred James** said that the subject was one that interested him very much, and he thought the author was deserving of very great credit for attacking what was admittedly a weak point in the present system of electro-precipitation. The author pointed out the defect of the iron anode, and that defect was becoming more and more accentuated in practice. He believed that Mr. Butters, who was responsible for the introduction of electro-precipitation on the Rand, had recently been in favour of lead anodes, or rather of Mr. Andreoli's peroxide of lead anodes, as a means of overcoming the defect which at present existed, viz., the decomposition of the iron anodes by the cyanide solution, and the consequent formation of Prussian blue, which contained a considerable proportion of gold, and which had to be treated as a bye-product. The author pointed out in his paper that Mr. Andreoli had also a special iron cathode, on which the gold was precipitated and from which it was removed by dipping into a bath of molten lead, which removed the gold in a fairly rapid manner. On looking into the electro-deposition process on the Rand, he (the speaker) had found one or two difficulties at the outset which arose from the fact that as soon as anything happened to interfere with the electric connections, the iron anode and the gold coated cathode immediately reversed, owing to their different electromotive forces in cyanide solutions, with the result that the gold went back into solution again. To overcome this difficulty, he sought for some metal which was so much more positive to gold that it would precipitate the latter whether there was any external electric current maintained or not; aluminium was just that metal. Aluminium would dissolve, and if the current of electricity were broken the aluminium would go into solution, and the gold would still be deposited. Mr. Cowper-Coles' experiments were very interesting, and he thought they might take it that the gold film was all that was claimed for it,



Digitized by Google

*i.e.*, it was easily rubbed off; but the apparatus proposed by the author in his paper was scarcely practicable, because the amount of anode and cathode surface required for effective precipitation was exceedingly large, and far greater than it would be possible to place in the form of a roll with a brush at the end. His own rough idea had been to have a long plate working on rollers, which could be drawn out, and the gold thus brushed off; but the gold was so loose that it would inevitably fall back into the precipitation vats.

The author's experiments did not appear to him to be conclusive, and had not been carried to an ultimate point. The author used a solution containing gold 2 dwt. per gallon, which he (the speaker) figured out to be over 20 oz. gold per ton (which was a solution that did not occur in practice), and, as a result of his work, the author reduced it to 3 oz. per ton, which, for a residual solution, showed that the experiments had not been carried sufficiently far. All the experiments had the same defect of not being brought down to a practical point. The greatest difficulty he had found in his own experiments with the process was that the aluminium cathode contaminated the cyanide solutions to a very considerable extent. They were accustomed to understand that it was the anode which was acted upon, and which went into solution, while the cathode remained unattacked; as a matter of fact, in working with aluminium cathodes, the action of the cyanide solution on the aluminium was so intense, in spite of the electric current, that in his experiments the solutions got practically choked up with aluminium hydrate. In one of his experiments with a lead anode and an aluminium cathode, the latter, which before the experiment weighed 3,579 grains, after the experiment only weighed 3,563 grains, or a loss of 16 grains. In practical working they would therefore expect a large amount of aluminium to be decomposed, forming aluminium hydrate, and this would interfere with the work, besides being a great waste of cathode. He had made experiments with various strengths, and found that the best result was obtained by using a much smaller current intensity than that used by the author. With only two cells, gold was still deposited and much less aluminium hydrate formed with a current of such low intensity; but in all his experiments the bother was that the decomposition of the aluminium cathode was such as to place it out of the question. Had the author been present, he would have liked to ask him how he managed to overcome that difficulty. The paper showed that Mr. Cowper-Coles worked with much higher current intensity until his last experiment, as to which he

Digitized by Google

stated that at the end of six hours the gold was seen covering the whole of the cathode as a very bright golden deposit of extreme thinness, but he did not mention what percentage was obtained from the solutions. The present practice was such that it was imperative to get a practically perfect precipitation from the solutions; he did not say that the process mentioned by the author was at fault, but considered that Mr. Cowper-Coles had not carried his experiments sufficiently far. He thought they should invite the author to give them the benefit of further work on the subject up to the ultimate extraction point. With regard to the author's statement that a total quantity of gold, amounting to 65·32 per cent., was recovered in 4 hrs. 10 mins., and the greater part deposited in the first hour, he should like to know how long it took to get out the remaining 30 per cent. or so, as on that the whole value of the precipitation process depended.

**The President** said that they were much obliged to Mr. James for his criticism of the paper, as he had called attention to the points which appeared to be most important. The suggestion as to a method of mechanically cleaning the plates, assuming the precipitation to be satisfactory, was one which would, in practice, probably have no importance, as it was not likely, with the large extent of plates which had to be used in modern works, that any automatic system of cleaning up would give anything like a corresponding advantage when the difficulties involved were taken into consideration; but the removal of the film seemed, on the face of it, to be a most decided reason for further investigations as to the full efficiency of extraction under conditions more nearly approaching those existing in practice. He was under the impression that something had already been done in Johannesburg in connection with the use of aluminium, but Mr. James informed him that the tests made there were simply in connection with the use of aluminium as a substitute for zinc in the ordinary precipitation boxes.

**Mr. Cowper-Coles** (who was not present at the meeting) wrote in reply to the discussion as follows:—

With reference to the President's remarks, I should like to point out that I believe I was the first to make any experiments on electro-depositing gold on aluminium as a ready means of recovering gold from cyanide solutions. Any experiments, as far as I know, that have been made previously in this direction have been for the purpose of precipitating gold on aluminium by simple immersion.

Referring to Mr. James' remarks, I should like to emphasize the fact that I have deposited gold successfully from weak solutions



Digitized by Google

of cyanide of potassium containing only 0·01 per cent. of cyanide of potassium and 3 dwt. of gold to the ton of solution. The difficulty of the aluminium hydrate pointed out by Mr. James is got over by working the solution warm, practically no aluminium hydrate is then formed. Up to the present I have not carried out any very accurate experiments to determine the time required to extract the whole of the gold from a cyanide solution, if the solution is used over again this is not a matter of great importance. After electrolysing a solution originally containing 3 dwt. of gold to the ton with aluminium cathodes, an analysis showed the gold to have been reduced to 1·6 grains per ton of solution.

At the present time I am carrying out a series of experiments on a very much larger scale, which I hope at a future date to communicate to the Institution.

**Mr. T. H. Leggett** then read the following paper on behalf of the author :—

Digitized by Google

# "Determination of the Present Value of a Mine on the Rand."

By FRED. HELLMANN, M.Inst.M.M.

THE determination of the present value of a mine, and, as a sequence, the intrinsic value of the shares, is naturally a matter of interest to engineers, financiers, and mining men generally. Doubtless many members of the Institute have been confronted with this problem and are familiar with the methods of solution. To such, and to others to whom the subject is new, the methods here submitted may, it is hoped, be of interest.

The accuracy with which the problem can be solved depends upon the reliability of the various factors entering into the calculation. If the life of the mine and the profit per ton milled over the total reef tonnage of the property—which involves the average grade of the ore and the average working costs over the life of the mine—could be definitely determined, the problem would be susceptible of an exact solution. As a matter of fact the life of a mine can hardly be determined within a year or two, and the profit per ton milled can only be estimated on the basis of the development to date and the costs obtaining at the time of examination. Furthermore, the formulæ deduced below presuppose the payment of an annual dividend at a fixed rate of interest on the present value. In reality a mine begins usually by paying a small dividend and gradually works up to a maximum, after which the dividends may or may not fall off as the mine approaches exhaustion. Since the variations in the yearly dividends cannot be estimated in advance, the only course possible is to assume an equal distribution of profits over the life of the mine.

It is, however, not expected that an exact value shall be placed on a given mine. All that an engineer can do is to gather such information as the mine affords and base on it the best possible approximation. The methods here described will therefore only

Digitized by Google

yield approximate results, not because the methods themselves are at fault, but because the various factors which enter into the calculations are, at best, but approximations. It should always be distinctly understood that estimates of the present value of a property are subject to revision as development progresses.

The problem is as follows:—

*First Case.*—To find the amount upon which the mine will pay an annual dividend at a stipulated rate of interest after deduction from the yearly profits of a contribution to amortization fund which, invested at a fixed rate of interest, compounded annually, will amount to the present value when the mine is exhausted.

If L be the life of the mine in years, there will be L contributions to amortization fund, *i.e.*, one at the end of every year, and likewise L dividends. Let P be the total net profit on the total reef tonnage of the property, S the annual contribution to amortization, D the annual dividend, then the necessary conditions are expressed by the following equation:—

$$L \times S + L \times D = P \quad \ldots\ldots\ldots \quad (1).$$

S may be readily calculated in terms of the present value V, the life of the mine L and $a$, which is the rate of interest for amortization fund dividend by 100, as follows:—

$$V = S[(1+a)^{L-1} + (1+a)^{L-2} + \ldots\ldots (1+a)^2 + (1+a) + 1].$$

$$V = S\frac{(1+a)^L - 1}{a}.$$

$$S = \frac{aV}{(1+a)^L - 1} = \frac{aP}{aL + [(1+a)^L - 1]Ld} \quad \ldots\ldots\ldots \quad (2),$$

$$D = dV \quad \ldots\ldots\ldots\ldots\ldots\ldots \quad (3),$$

where $d$ is the rate of interest for dividends divided by 100.

Substituting these values in (1) and solving for V,

$$V = \frac{P}{\frac{aL}{(1+a)^L - 1} + Ld} \quad \ldots\ldots\ldots \quad (4).$$

Example: Let P = £1,000,000, $a = \frac{3}{100}$, $d = \frac{6}{100}$, L = 20,

then $$V = \frac{1{,}000{,}000}{\frac{0{\cdot}03 \times 20}{(1{\cdot}03)^{20} - 1} + 20 \times 0{\cdot}06} = 0{\cdot}5144 \times 1{,}000{,}000,$$

$$V = £514{,}400.$$

Digitized by Google

$$S = \frac{0{\cdot}03 \times 514{,}400}{(1{\cdot}03)^{20} - 1} = 0{\cdot}0372 \times 514{,}400,$$

$$S = £19{,}135\ 13s.\ 7{\cdot}2d.$$

*Second Case.*—If it be *not* stipulated that the dividends shall be payable annually at a fixed rate of interest, but instead, that the total dividend over the life of the mine shall be equivalent in amount to a certain annual rate of interest, the problem may be so expressed as to enhance the present value somewhat by decreasing the total contribution to amortization fund. Thus, let there be but $(L - 1)$ contributions to amortization fund, one, namely, at the beginning of every year except the first. Equation (1) may then be transformed as follows:—

$$(L - 1)S_1 + D = P \ldots\ldots\ldots\ldots \quad (5),$$

in which all letters excepting D have the same significance as in (1). D is here the total dividend over the life of the mine.

$$V_1 = S_1[(1 + a)^{L-1} + (1 + a)^{L-2} + \ldots\ (1 + a)]\ldots\ (6).$$

$$V_1 = \frac{(1 + a)[(1 + a)^{L-1} - 1]}{a} S_1 \ldots\ldots\ldots \quad (7).$$

$$S_1 = \frac{aV_1}{(1 + a)[(1 + a)^{L-1} - 1]} =$$

$$\frac{aP}{a(L - 1) + (1 + a)[(1 + a)^{L-1} - 1]Ld} \ldots\ (8).$$

$$D = dLV_1 \ldots\ldots\ldots\ldots\ldots \quad (9).$$

$$(L - 1)\frac{aV_1}{(1 + a)[(1 + a)^{L-1} - 1]} + dLV_1 = P.$$

$$V_1 = \frac{P}{\dfrac{a(L - 1)}{(1 + a)[(1 + a)^{L-1} - 1]} + dL} \ldots\ldots \quad (10).$$

On comparing (8) with (2) and (10) with (4) it becomes evident that

$$S_1 > S,$$
$$V_1 > V.$$

The total contribution to amortization in the first case is LS, in the second $(L - 1)S_1$, and

$$LS > (L - 1)S_1.$$

The following table shows the relative values of S, $S_1$, LS,

Digitized by Google

$(L-1)S_1$, V, and $V_1$ for certain values of $a$, $d$, and L within the limits of the problem under consideration :—

TABLE No. 1.

| $a$ | $d$. | L. | S. | $S_1$. | LS. | $(L-1)S_1$. | V. | $V_1$. |
|---|---|---|---|---|---|---|---|---|
| 0·03 | 0·02 | 2 | 0·4805P | 0·9604P | 0·9610P | 0·9604P | 0·9754P | 0·9892P |
| 0·03 | 0·02 | 50 | 0·0061P | 0·0062P | 0·3050P | 0·3038P | 0·6929P | 0·6954P |
| 0·03 | 0·06 | 2 | 0·4457P | 0·8900P | 0·8914P | 0·8900P | 0·9048P | 0·9166P |
| 0·03 | 0·06 | 50 | 0·0025P | 0·0026P | 0·1287P | 0·1274P | 0·2903P | 0·2908P |
| 0·03 | 0·10 | 2 | 0·1650P | 0·3268P | 0·3300P | 0·3268P | 0·8437P | 0·8540P |
| 0·03 | 0·10 | 50 | 0·0016P | 0·0016P | 0·0814P | 0·0805P | 0·1837P | 0·1839P |

The annual net profit from the mine is $\frac{P}{L}$.

In the first case the amount distributable annually as a dividend is :—

$$\frac{P}{L} - S, \text{ which is } \frac{100\left(\frac{P}{L} - S\right)}{V} \text{ per cent.}$$

$$= \frac{100\left[\frac{V}{L}\left(\frac{aL}{(1+a)^L - 1} + Ld\right) - \frac{aV}{(1+a)^L - 1}\right]}{V} \text{ p. c. on V}$$

$$= (d \times 100) \text{ per cent. on V.}$$

In the second case the amount distributable annually as a dividend is :—

$$\frac{P}{L} - S_1, \text{ which is } \frac{100\left[\frac{P}{L} - S_1\right]}{V_1} \text{ per cent.}$$

$$= \frac{100\left[\frac{V_1}{L}\left(\frac{(L-1)a}{(1+a)[(1+a)^{L-1} - 1]} + Ld\right) - \frac{aV_1}{(1+a)[(1+a)^{L-1} - 1]}\right]}{V_1} \text{ per cent.}$$

$$= 100\left[d - \frac{a}{L(1+a)[(1+a)^{L-1} - 1]}\right] \text{ per cent. on } V_1,$$

therefore less than $(100d.)$ per cent.

The amount paid out in dividends up to the beginning of the last year will be at the rate

$$100\,(L-1)\left[d - \frac{a}{L(1+a)[(1+a)^{L-1} - 1]}\right] \text{ p. c. on } V_1,$$

Digitized by Google

and the dividend for the last year will be at the rate of

$$\frac{100\,\frac{P}{L}}{V_1}\text{ p. c.} = 100\left[\frac{(L-1)a}{L(1+a)[(1+a)^{L-1}-1]}+d\right]\text{p. c. on } V_1.$$

The total dividend over the life of the mine will therefore be

$$100\,(L-1)\,d + 100d = (100Ld) \text{ per cent.}$$

It would seem that the first method, which is based on the payment of an annual dividend at a fixed rate of interest, is more in accordance with the requirements of investors than the second one, which defers the payment of a portion of the dividends to the end of the mine's life. Table No. 3 is based on the first method.

Many mining companies declare their dividends semi-annually. If the contributions to amortization be likewise made semi-annually and the interest on the fund compounded every six months, the formulæ become—

$$V_2 = \frac{P}{\frac{aL}{\left(1+\frac{a}{2}\right)^{2L}-1}+Ld} \quad \ldots\ldots\ldots\ldots \quad (11).$$

$$S_2 = \frac{\frac{a}{2}V_2}{\left(1+\frac{a}{2}\right)^{2L}-1} \quad \ldots\ldots\ldots\ldots \quad (12).$$

in which the letters retain the same meaning as in (2) and (4).

In this connection the following table may be of interest:—

Digitized by Google

TABLE No. 2.—COMPARATIVE TABLE OF COEFFICIENTS FOR ANNUAL AND SEMIANNUAL PAYMENTS OF DIVIDENDS.

| 1 Life in years. | Rate of interest amortization fund. | Rate of interest for dividends. | Annual. 2 $\frac{a}{(1+a)^L-1}$ | Annual. 3 $\frac{1}{\frac{La}{(1+a)^L-1}+Ld}$ | Semi-annual. 2 $\frac{\frac{a}{2}}{\left(1+\frac{a}{2}\right)^{2L}-1}$ | Semi-annual. 3 $\frac{1}{\frac{La}{\left(1+\frac{a}{2}\right)^{2L}-1}+Ld.}$ |
|---|---|---|---|---|---|---|
| | p. c. | p. c. | | | | |
| 10 | 3 | 5 | 0·0872 | 0·7289 | 0·0432 | 0·7327 |
| 10 | 3 | 6 | 0·0872 | 0·6792 | 0·0432 | 0·6827 |
| 10 | 3 | 7 | 0·0872 | 0·6361 | 0·0432 | 0·6391 |
| 20 | 3 | 5 | 0·0372 | 0·5734 | 0·0184 | 0·5756 |
| 20 | 3 | 6 | 0·0372 | 0·5144 | 0·0184 | 0·5162 |
| 20 | 3 | 7 | 0·0372 | 0·4664 | 0·0184 | 0·4679 |

Table No. 3 gives the value of the coefficients

$$\frac{a}{(1+a)^L-1} \quad \text{and} \quad \frac{1}{\frac{aL}{(1+a)^L-1}+Ld},$$

when the rate of interest for amortization fund is 3 per cent., the rate of interest for dividends 6 per cent., and L varies from 0 to 50 years.

Table No. 4 is a statement of reef areas and tonnages per claim. The tonnages are based on 12 cubic feet of rock in place to the ton. Mr. Franklin White's interesting determinations of the specific gravity of Rand conglomerates and accompanying rocks, published in the *South African Mining Journal* of the 4th September, 1897, gave as an average 11·86 cubic feet to the ton, so that the assumption that 12 cubic feet go to the ton involves a small error on the right side.

Table No. 5 gives a number of equivalents that may be found useful.

In conclusion, the following example of the use of the tables is submitted. It also illustrates clearly the effect of sorting on the value of a mine.

A mine has 150 claims. The dip of the reef is 30°, and the average assay value of the same is 14 dwt. over a stoping width of 4 ft. The tonnage per claim will be 4 × 6,160 (see Table No. 4), deducting 10 per cent. for dykes, pillars, and arches, there

Digitized by Google

remain 22,176 tons, as the net tonnage per claim. The total net tonnage of the property would therefore be 150 × 22,176 = 3,326,400 tons.

It is a well-known fact that the mines of the Rand obtain an extraction of only 60 per cent. of the value called for by the mine assays, whereas the returns from mill and cyanide works show an average extraction of about 80 per cent. of the value of the ore in the mill bins. This is due no doubt to the breaking of more waste rock in the stopes than is allowed for in the assumed stoping width, whereby the tonnage is increased and the value correspondingly decreased. To account for an extraction of 60 per cent. instead of 80 per cent. the tonnage must be increased by 33⅓ per cent., which reduces the value by 25 per cent.

*First case.*—Let there be no sorting!

As shown above, the tonnage is increased by 33⅓ per cent., and is, consequently, 4,435,200 tons. The yield per ton would then be 8·4 dwt. fine gold or 35*s*. Assuming the cost per ton to be 20*s*., which figure is based on the returns of a well-known and well-managed Rand mine, then the profit per ton is 15*s*. The total net profit on the entire tonnage of the property would, therefore, be £3,326,400. Supposing the property to be equipped with a battery of 100 stamps, and assuming the duty per stamp to be 5 tons, and the working month to consist of 27 days, the life of the mine would be about 27 years. Table No. 3 shows the present value under these conditions to be

$$V = 0{\cdot}4378 \times 3{,}326{,}400 = £1{,}456{,}298, \text{ and}$$
$$S = 0{\cdot}0246 \times 1{,}456{,}298 = £35{,}825.$$

*Second case.*—Let sorting be carried on to the extent of 25 per cent.

The material sorted out will assay about 1½ dwt. to the ton, or since 1,108,800 tons will be sorted out, 1,663,200 dwt. will be lost. The remaining gold (10·5 × 4,435,200) dwt. less 1,663,200 dwt., will be contained in the remaining 3,326,400 tons, which is therefore worth 13·5 dwt. per ton. The yield will be 10·8 dwt. or 45*s*. per ton. Costs will be increased to about 22*s*. 6*d*., so that the profit per ton milled will be 22*s*. 6*d*. The total net profit on the total tonnage will be (22*s*. 6*d*. × 3,326,400) shillings = £3,742,200, and the life of the mine will be about 20 years. Again, referring to Table No. 3, the value of V is found to be:—

$$V = 0{\cdot}5144 \times 3{,}742{,}200 = £1{,}924{,}987, \text{ and}$$
$$S = 0{\cdot}0372 \times 1{,}924{,}987 = £71{,}609.$$

Digitized by Google

If the capital of the company consists of 100,000 shares, the value of the share is 29*s.* 4*d.* if no sorting be done, and 38*s.* 5*d.* if sorting to the extent of 25 per cent. be carried out.

If in the first case the stamping capacity be so increased that the life of the mine becomes 15·46 instead of 27 years, *i.e.*, by 77 per cent., the value of V becomes (from Table No. 3 by interpolating between 15 and 16 years)

$$V = 0{\cdot}5787 \times 3{,}326{,}400 = £1{,}924{,}987.$$

or equal to the value of V in the second case. Sorting to the extent of 25 per cent. is thus equivalent, in point of present value, in this instance to increasing the stamping capacity by 77 per cent. That is to say, in order to make the present value of the mine, without sorting, as great as it is with 25 per cent. sorting; the full tonnage (4,435,200 tons) must be crushed in 15·46 years, which would require 177 stamps.

Were the number of stamps 200 instead of 100, the life in the first case would be about 14 years, and the present value £2,005,154. In the second case the life would be about 10 years, and the present value £2,539,831. To give the property the same value without sorting, the life would have to be reduced to 6½ years, which means an increase in the milling capacity of 110·6 per cent.

The percentage of sorting assumed above involves sorting on the tables or floors to the extent of 33·3 per cent., that is, if the "fines" be estimated at 25 per cent. of the total tonnage. The Ferreira estimates its sorting at 32·5 per cent. (see last annual report), which, on the assumption of one-fourth of the rock hoisted being "fines," would necessitate the picking out of 43·3 per cent. of the rock passing through the sorting house. The percentage of "fines" will depend on the nature of the rock, and the strength of the explosive used. On the Rand, where gelatine containing 90 to 95 per cent. nitro-glycerine, and No. 1 dynamite containing 75 to 80 per cent. nitro-glycerine are generally employed, the "fines" may be safely estimated at one-fourth of the tonnage hoisted.

Digitized by Google

TABLE NO. 3.—PRESENT VALUE OF A MINE.

TABLE OF COEFFICIENTS (Dividends payable Annually).

Rate of Interest for Amortization Fund = 3 per cent.
" " Dividends = 6 "
Life of Mine .... 1 to 50 years.
Present value = Column 3 × total net Profit.
Annual payment to Amortization Fund = Column 2 × Present Value.

| 1. | 2. | 3. |
|---|---|---|
| Life in years. | $\frac{a}{(1+a)^L - 1}$. | $\frac{1}{\frac{La}{(1+a)^L - 1} + Ld}$. |
| 1 | 1·0000 | 0·9434 |
| 2 | 0·4926 | 0·9048 |
| 3 | 0·3236 | 0·8689 |
| 4 | 0·2390 | 0·8360 |
| 5 | 0·1883 | 0·8054 |
| 6 | 0·1546 | 0·7768 |
| 7 | 0·1305 | 0·7499 |
| 8 | 0·1124 | 0·7251 |
| 9 | 0·0984 | 0·7015 |
| 10 | 0·0872 | 0·6792 |
| 11 | 0·0781 | 0·6583 |
| 12 | 0·0705 | 0·6386 |
| 13 | 0·0640 | 0·6203 |
| 14 | 0·0585 | 0·6028 |
| 15 | 0·0538 | 0·5858 |
| 16 | 0·0496 | 0·5703 |
| 17 | 0·0459 | 0·5555 |
| 18 | 0·0427 | 0·5409 |
| 19 | 0·0398 | 0·5274 |
| 20 | 0·0372 | 0·5144 |
| 21 | 0·0349 | 0·5018 |
| 22 | 0·0327 | 0·4903 |
| 23 | 0·0308 | 0·4788 |
| 24 | 0·0290 | 0·4681 |
| 25 | 0·0274 | 0·4576 |
| 26 | 0·0259 | 0·4477 |
| 27 | 0·0246 | 0·4378 |
| 28 | 0·0233 | 0·4287 |
| 29 | 0·0221 | 0·4200 |
| 30 | 0·0210 | 0·4115 |
| 31 | 0·0200 | 0·4032 |
| 32 | 0·0190 | 0 3956 |
| 33 | 0·0181 | 0·3880 |
| 34 | 0·0173 | 0·3805 |
| 35 | 0·0165 | 0·3735 |
| 36 | 0·0158 | 0·3665 |
| 37 | 0·0151 | 0·3599 |
| 38 | 0·0145 | 0·3532 |
| 39 | 0·0138 | 0·3474 |

Digitized by Google

TABLE No. 3—*continued.*

| 1. | 2. | 3. |
|---|---|---|
| Life in years. | $\frac{a}{(1+a)^L - 1}$. | $\frac{1}{\frac{La}{(1+a)^L - 1} + Ld.}$ |
| 40 | 0·0133 | 0·3411 |
| 41 | 0·0127 | 0·3355 |
| 42 | 0·0122 | 0·3297 |
| 43 | 0·0117 | 0·3243 |
| 44 | 0·0112 | 0·3192 |
| 45 | 0·0108 | 0·3138 |
| 46 | 0·0104 | 0·3088 |
| 47 | 0·0100 | 0·3039 |
| 48 | 0·0096 | 0·2993 |
| 49 | 0·0092 | 0·2949 |
| 50 | 0·0089 | 0·2903 |

## No. 4.—TABLE OF TONNAGES.

Calculated for one claim, 12 inches of reef, and for every 5° of dip from 0° to 90°.

12 cubic feet to the ton.

| Dip degrees. | Reef area per claim. | | Tons per claim. |
|---|---|---|---|
| | Dimensions. English feet. | English square feet. | |
| 0 | 154·95 × 413·2 | 64,025 | 5,335 |
| 5 | „ × 414·8 | 64,270 | 5,356 |
| 10 | „ × 419·6 | 65,017 | 5,418 |
| 15 | „ × 427·8 | 66,288 | 5,524 |
| 20 | „ × 439·7 | 68,131 | 5,678 |
| 25 | „ × 455·9 | 70,642 | 5,887 |
| 30 | „ × 477·1 | 73,927 | 6,160 |
| 35 | „ × 504·4 | 78,157 | 6,513 |
| 40 | „ × 539·4 | 83,580 | 6,965 |
| 45 | „ × 584·4 | 90,553 | 7,546 |
| 50 | „ × 642·8 | 99,602 | 8,300 |
| 55 | „ × 720·4 | 111,626 | 9,302 |
| 60 | „ × 826·4 | 128,051 | 10,671 |
| 65 | „ × 977·7 | 151,495 | 12,625 |
| 70 | „ × 1208·1 | 187,195 | 15,600 |
| 75 | „ × 1596·5 | 247,378 | 20,615 |
| 80 | „ × 2379·5 | 368,703 | 30,725 |
| 85 | „ × 4740·9 | 734,602 | 61,217 |
| 90 | „ × 5000·0* | 774,750 | 64,562 |

* A vertical depth of 5,000 feet is here assumed as the limit of profitable mining.

Digitized by Google

No. 5.—Table of Equivalents.

| | | |
|---|---|---|
| 1 Cape foot | = | 1·033 English feet. |
| 1 English foot | = | 0·968 Cape foot. |
| 1 square Cape foot | = | 0·067 square English foot. |
| 1 „ English foot | = | 0·937 „ Cape foot. |
| 1 cubic Cape foot | = | 1·102 cubic English feet. |
| 1 „ English foot | = | 0·907 „ Cape foot. |
| 1 claim | = | 150 × 400 Cape feet. |
| 1 „ | = | 60,000 square Cape feet. |
| 1 „ | = | 154·95 × 413·2 English feet. |
| 1 „ | = | 64,025 square English feet. |
| 1 „ | = | 1·47 English acres. |
| 1 Cape rood | = | 12 Cape feet. |
| 1 „ „ | = | 12·396 English feet. |
| 1 morgen | = | 600 square Cape roods. |
| 1 „ | = | 86,400 square Cape feet. |
| 1 „ | = | 92,196 „ English feet. |
| 1 „ | = | 2·1165 English acres. |
| 1 acre | = | 43,560 square English feet. |
| 1 „ | = | 40,821·34 square Cape feet. |

## DISCUSSION.

**The President** considered that Mr. Hellmann's paper was a highly interesting one; and although applicable to the Rand, its usefulness was not in the slightest degree impaired, as that district was at the present time a most important factor in mining. The tables prepared by the author were most useful to all those interested in South African mines, and he had heard that people who were not mining engineers wished to make use of the figures in connection with strictly commercial matters connected with mining.

**Mr. J. H. Collins** thought Mr. Hellmann deserved their thanks for the trouble he had taken in preparing his paper. Attempts to apply mathematics in the direction of determining the actual and prospective value of a mine had been made before, yet, although they might have a certain value to mathematically inclined people, as Mr. Hellmann said in his paper, "the accuracy with which the problem could be solved depended upon the reliability of the various factors entering into the calculation." He thought that

Digitized by Google

remark deserved careful consideration. The author went on to say that "the life of a mine could hardly be determined within a year or two, and the profit per ton milled could only be estimated on the basis of the development to date and the costs obtaining at the time of the examination;" all that was quite true, and, with regard to mines other than gold, there was the further factor of the greatly varying price of the product to be taken into consideration. Seeing that the vital factors were so many, and subject to such great variations, he should have more faith in the experienced mine manager, even if he were unskilled in mathematics, than in the figured results of the most accomplished mathematician that ever lived. He considered that the danger of such formulæ was that the young proficient fresh from the mining school or college might lose sight of the uncertainty of his assumed facts in the accuracy of the calculations based upon them. It had been well said that the mathematical mill was very effective, but, as in the case of other mills, the resulting product depended mainly upon what was put into them, and in the present instance men who had sufficient skill and experience to choose and determine the proper factors would come to a fairly right conclusion, whether mathematical formulæ were used or not.

**Mr. T. H. Leggett** said that Mr. Collins' alarm at the long string of formulæ contained in Mr. Hellmann's paper was nothing to be ashamed of, it being shared oftentimes by other prominent engineers, such as, for instance, John Trautwine, who, in the preface to his widely known *Engineer's Handbook*, makes frank admission of the fact that his knowledge of the higher mathematics had fallen into "innocuous desuetude," and he proceeds to say that he considers that Rankine and similar authors are glaring examples of how simple truths can be covered up under a mass of technical mathematics.

Mr. Hellmann did not claim to have discovered a cast-iron formula, by means of which one could determine a fixed and unalterable value of a mine upon the Rand, as Mr. Collins seemed to think; but he (the speaker) thought the author made it clear that he could determine, with a fair degree of accuracy, the present value of a Rand property when certain factors, such as the amount of ore in the property, its value, and the number of stamps to crush it, are known. Anyone familiar with the Witwatersrand Banket Reefs knew that at the present day these factors can be determined with a very fair degree of accuracy, and Mr. Hellmann claims for his resultant value only the amount of accuracy that is contained in those given factors, no more and no less. They were

Digitized by Google

all doubtless aware that many of the first row of deep levels upon the Rand have done six and seven miles of development work in drives, raises, and winzes before a ton of rock has been crushed, and the reefs in these workings are sampled systematically at intervals of from 5 to 10 feet. The outcrop Companies had been working now for so many years, and had so invariably followed the practice of keeping development work years ahead of the mill requirements, and their assay plans up to date, that this feature, taken in conjunction with the large amount of work done upon the first row of deep levels, enabled one to determine very closely the average values of the reefs in any given section of the Rand, together with their average widths or thicknesses.

Any engineer called upon to determine the probable life and value of a mine, must necessarily determine the ore tonnage contained in the property and its value before he can arrive at an opinion.

Upon the Witwatersrand these factors could be determined with a far greater degree of accuracy than anywhere else in the world, and as Mr. Hellmann said in his paper, given these factors, if the total net profit obtainable from a given number of tons of ore within a certain period of time is multiplied by the figures in column three of Table 3 lying opposite to the number representing the life of the mine in years, one can arrive at its present value. This was a very useful result and the kernel of the whole mathematical nut. The author did not undertake to show anyone how to obtain the tonnage of ore in the property or its value; one must arrive at this by the usual careful methods of mine examination, and it was pointed out in the paper that the "profit per ton milled can only be estimated on the basis of the development to date and the costs obtained at the time of the examination." Mr. Hellmann stated explicitly that it is not expected that an *exact* value should be placed on a given mine, and further points out that the factors alluded to above and which form the basis of the calculations are but approximations; hence his result is as he states "only the best possible approximation." The output of the Witwatersrand mines, after a certain amount of development work has been done, vary far less than anywhere else in the world; hence the value of Mr. Hellmann's determination.

He wished to call attention to the remarks on pages 235 and 236 regarding the value of sorting. Mr. Hellmann had been his (the speaker's) assistant engineer for the past three years, and they had both been very much interested in ascertaining the effect of



Digitized by Google

the sorting out of waste rock after mining. Such sorting shortens the life of the mine, while it increases the milling capacity, and, therefore, the "present value" of the property. The statement on page 236 "that sorting to the extent of 25 per cent. is equivalent, *in point of present value* in the given instance, to increasing the stamping capacity by 77 per cent." is startling but true. This matter of sorting out waste-rock has in recent years received much greater attention from engineers upon the Rand, as is conclusively shown by the following figures from the State Mining Engineers' Report for the Witwatersrand for the years 1896 and 1897:—

| | 1896. | 1897. |
|---|---|---|
| | Tons. | Tons. |
| Hauled..... | 4,403,214 | 5,930,714 |
| Milled ..... | 3,980,652 | 5,275,509 |
| Waste sorted (by difference) ... | 422,562 = 9·6 per cent. | 655,205 = 11 per cent. |

In 1897 the increase in tons hauled over the preceding year amounted to 1,527,500 tons, or 34·7 per cent., and while the proportionate increase in waste sorted out to tons hauled was only 1·4 per cent., this latter percentage represented 232,643 tons of waste thrown out, or an increase over 1896 of 55·1 per cent.

In other words the actual tonnage sorted out had increased nearly twice as fast as the tons hauled. It was safe to predict that this increase would be still greater in 1898, because when large properties enter the crushing stage after years spent in development work and equipment, it was not possible during the first few months to give the closest attention to the sorting appliances and bring the latter to their final and highest state of efficiency.

**Mr. A. A. Blow** said that his experience in mining extended not only to South Africa, but also to a great many other parts of the world, and he was of opinion that in the majority of the districts he had visited it would be well nigh impossible for any engineer, however well equipped he might be mathematically, to figure out by any given formulæ the value and life of a mine, and the amount of dividends it should pay to the shareholders. South Africa, however, was unique—there was no country like it in his experience or in that of any other mining engineer; the reefs there were so regular and uniform and the results had been so carefully studied and tabulated that it was possible with the

Digitized by Google

formulæ which Mr. Hellmann had drawn up to figure out almost exactly what any given piece of ground would produce. If a mine manager on the Rand could not tell his directors how many tons of ore he had, what the value would be, what would be the cost of extraction by different methods of amalgamation and cyaniding, it would be the duty of the board to find somebody who could, but such a thing could not be expected in any other part of the world, and he would certainly not like to have to figure out by Mr. Hellmann's formulæ the value of a mine in any other district but the Rand.

**Mr. James** thought that Mr. Hellmann's paper formed an answer to the remark made by a member at a recent meeting, who said that experience in mining amounted to nothing. It had struck him in reading the papers of the American Institute of Mining Engineers, that they brought to the help of their practice a greater depth of research in regard to the application of intricate scientific calculations to mining problems than was the case in this country. He had noticed this recently, more particularly with regard to the practice of jigging and spitzkasten work, and the result was that the American mining engineer was able to bring scientific formulæ to the aid of his practice and go ahead accordingly. It was well known that American engineers had had a great deal to do with the recent development of the Rand and the determination of the values, and he thought that what they had achieved with scientific calculations in connection with the deep levels of the Rand was the best answer to the criticisms passed on the practicability of such formulæ. One statement of the author which interested him was that if the capital of a company consisted of 100,000 shares, and the value of the shares was 29*s.* 4*d.* if no sorting was done, they would be worth 38*s.* 5*d.* if sorting to the extent of 25 per cent. was carried out, which showed that if the rock was sorted and the cost of putting through the barren rock saved, the value of the shares would be increased very considerably.

**The President** thought that the criticisms on the intricate nature of the calculations were rather beside the mark, as the formulæ were only intended to show how certain results had been obtained and was not necessarily a portion of the paper. The calculation simply amounted to a commercial one of interest on the money, or payment to sinking fund, such as would be made in any commercial transaction where the elements were sufficiently safe to calculate far ahead, and as Mr. Leggett had stated there were certain factors which could safely be taken and used for



Digitized by Google

calculations on the Rand, while such a state of things did not exist in other districts. Mr. Blow and Mr. Collins had pointed out that the calculations would be useless in other countries, and he agreed with them that such was the case, but there was no question that properties were actually bought and sold on such calculations at the present time on the Rand. As the mine was developed the calculations might need to be altered, but that would only occur after the duty of the mining engineer was practically finished; the calculations simply served the purpose of putting into pounds, shillings, and pence the result of the engineer's work in determining the averages and values in the first instance. The average assay value and width were determined by actual tests; when that was arrived at and certain allowances made for dykes and faults (which were now very accurately mapped out on the Rand), it was possible to make calculations which were so safe that money could be put upon them, and money was put upon them. He was sure that Mr. Hellmann would be the last person to claim anything more than that for his paper. The calculations were certainly made very closely; for instance the author had taken 12 cub. ft. to the ton, while as a rule in most mining calculations of ore in sight, engineers preferred to take more than that; in the States it was quite usual to take 13 or 14 This was done in order to have a margin on the safe side, but in the case of the Rand the margin was utilized for allowances for dykes and faults, so the figure given in the calculations was a fair one. The costs of working varied with the changing conditions of mining, but there was nothing in the paper which fixed the costs, nor the values of the ore, which were factors which had first to be established by the mining engineer, and the author practically placed before them an easy way to summarise results on the prevailing system in South Africa for valuing properties. He considered that the paper was a very valuable addition to the Transactions, as placing on record the very unique condition of affairs at the Rand, and it could not fail to have a large amount of usefulness to those of their members interested in South Africa.

The following communication was then read.

Digitized by Google

## "Notes on a Combination Mill in the United States."

Communicated by WALTER MCDERMOTT (*President*).

So much is heard now of cyanide and chlorination mills, that it is as well to occasionally have a reminder of the existence of other processes in mills of modern construction. The following notes are furnished to me by Mr. Arthur Buckbee, superintendent of the Eureka Hill Mining Company of Utah. To this gentleman I freely assign all credit for any usefulness in the notes, and to him I cheerfully transfer any criticisms which they may provoke. There is nothing in the bye-laws of the Institution which requires that a communication by a member shall be evolved from his own inner consciousness. What is required are facts connected with practical working, and the ultimate source of the facts is of secondary importance.

The mill as first erected in September, 1894, consisted of 40 stamps, subsequently increased to 100 stamps of 950 lb. These have an average drop of 7½ in., 100 drops per minute. Below the stamps, and receiving the pulp from the same after classifying on Brown's hydrometric sizers, are 45 plain belt Frue vanners 6 ft. wide, and five corrugated belt vanners of the same width, making 50 in all. Below the Vanners are 32 5-ft. standard amalgamating pans, and 16 8-ft. settlers, with the usual elevators for quicksilver, clean-up pans, retorts, &c. The power is supplied by a twin compound non-condensing Corliss engine 20 in. and 32 in. × 48 in. stroke, and seven boilers 54 in. × 16 ft. Comet rock breakers above the ore bins feeding the stamps break the ore to pass a 3-in. ring. The ore is stamped wet through a 35-mesh brass wire screen.

The ore has a value of about 20 oz. silver, 2 dwt. gold, 4 per cent. lead, and a little copper. About half the value is taken out by the Frue vanners as a concentrate worth on the average about 75 oz. silver, 6 to 7 dwt. gold, and 22 per cent. lead. These concentrates are shipped to smelters. The tailings of the vanners go direct into a system of settling tanks, above and behind the pans, the overflow water being pumped back to the stamps, as it is not entirely clear. The settled pulp is dumped by trap doors in the bottoms of the tanks on to the floor below level with the top of the pans. It is charged into these in charges of about 3,000 lb.,

Digitized by Google

and sufficient slimes added to bring it to the proper consistency. The chemicals used for charge are about 5 per cent. salt, 3 lb. copper sulphate, 2 lb. sulphuric acid, 2 lb. iron borings, 2 oz. concentrated lye; all charged in with the ore. Steam is turned on and temperature raised to about 180° F., this usually taking about two hours, and then 200 lb. of quicksilver added. The pan is run another six hours, making total time eight hours, and then discharged into a settler, where water is added, amalgam settled, and drawn off through syphon taps. The average extraction is about 80 per cent., which is considered very fair work for the raw treatment of a complex ore. The rock is hard, and only crushes up to 1·7 tons per 24 hours per stamp.

**The President** said that his paper explained itself and was simply for the purpose of putting on record a type of mill and process which, in the present development of smelting, chlorinating and cyaniding, gave signs of becoming as extinct as the dodo in time. The details regarding the charges of pans and settlers might be somewhat new to some of the members. The mesh of the screen was 35.

Digitized by Google

# EIGHTH ORDINARY MEETING, 18th May, 1898.

Mr. WALTER McDERMOTT (*President*) in the Chair.

---

The minutes of the previous meeting having been read and confirmed,

The following paper was read.

## "Filter-Press Treatment of Gold Ore Slimes (Hannan's, West Australia)."

By WILLIAM McNEILL, M.Inst.M.M.

SINCE the successful application of the MacArthur-Forrest cyanide process for the recovery of gold from stamp mill tailings, various methods have been tried for treating by the same means the "slime" portions of these tailings. These slimes are generally eliminated in intermediate or settling vats or by hydraulic separators so as to leave the bulk of the tailings in a percolatable state for the ordinary filtration cyanide treatment.

Little success attended these efforts until about the year 1897, the slimes up to that date being generally run to waste, but within the last few years steady progress has been made, particularly in the treatment of slimes on the Rand, the statistics for last year clearly showing that on these fields, whilst the amount of ore crushed increased by about 32 per cent., and the gold recovered in the batteries by nearly the same amount, the increase in the tailings treated by the cyanide process amounted to 35 per cent. and the gold recovered thereby to 45 per cent.* This increase in the amount of gold recovered by means of cyanide, over and above that which might have been expected from the increased tonnage of the tailings dealt with, may not be entirely due to the success which has attended the treatment of slimes, but there can be no

* Annual Report, Chamber of Mines, Witwatersrand, 1896-7.

Digitized by Google

doubt that a certain percentage may be safely attributed to the slime methods now in use. Now that the Chamber of Mines of the South African Republic separately set forth in their monthly analyses of the gold production the yield from slimes, definite information upon this important point is obtainable, and it appears from the published returns for January last that about 5 per cent. of the total gold recovered by means of cyanide resulted from the treatment of slimes.

The difficulty in treating these eliminated slimes is generally admitted to be chiefly mechanical, the gold being in a finely divided and easily soluble state.

On the Rand the lime or coagulation process has been attended with marked success. Briefly described this process consists in the coagulation of the slimy particles by the addition of lime, settlement of the flocculent precipitate and treatment by weak cyanide solutions which are decanted after settlement. The slimes after decantation contain about 50 per cent. of their weight of cyanide solution, which is partly removed by dilution with weaker solutions. It will therefore be seen that this method requires a large amount of solution compared with the ordinary percolation cyanide process, and even with the use of successive weaker washes still leaves in the slimes 50 per cent. of their weight of weak cyanide solution, which must necessarily contain a certain percentage of gold.

The coagulation process followed by decantation as above described has proved itself an economic success for slimes which are not very rich, and where water is fairly plentiful. The conditions are, however, somewhat different on most of the West Australian Gold Fields, where water is not abundant, and where the talcose clayey nature of the ores of the oxidized zones renders it impossible to crush them either by a wet or dry process without the production of a large percentage of rich slimes in many cases carrying as much as one ounce of gold per ton of ore. As an instance of the richness of the slimes from some of these West Australian ores, it may be mentioned that in some of the dry crushing mills the finest impalpable powder which floated in the air about the mill buildings and was finally deposited upon the top of the roof rafters, assayed from 1 to 2 oz. of gold per ton.

The use of special crushing machinery which will pulverize without the creation of slimes has been frequently advocated, but whilst ores vary within wide limits in the percentage of slimes produced when they are crushed, the author is of the

Digitized by Google

opinion that the ideal plant will, for reasons set forth below, never be obtained, even if it were considered practicable to employ a gradual system of reduction followed by careful and systematic sizing for the immediate removal of the particles of ore which have been reduced to the desired degree of fineness. The formation of slimes should rather be regarded as an inherent defect of all crushing machinery, and efforts made to improve the treatment of the slimes produced are more likely to give remunerative results than those directed to the production of an ideal crushing plant with its necessary refinements and complications.

Mr. C. A. Moreing, to whom the author is indebted for many of the particulars set forth in this paper, was one of the first to consider the best and most economical method for treating slimes, more especially those resulting from the crushing of West Australian ores. At last year's Conference of the Institution of Civil Engineers, Mr. Moreing advocated the separation of these ores after dry crushing into two classes, viz.:—(1) A coarse or sandy product easily percolatable, and (2) slimes, and the separate treatment of the products thus obtained. A mill constructed on these lines has been successfully at work at the Hannan's Brownhill Mine for some time past, and the details having been carried out by the author under Messrs. Bewick, Moreing & Co.'s direction, he thought it would be of interest to bring the following description before the Members of this Institution, and trusts that the particulars given will elicit such a discussion on this important subject as will throw some light upon many points at present involved in obscurity.

The author does not for one moment contend that the coagulation process followed by decantation could not be used with more or less success upon the ores of the character met with in West Australia, but is of opinion that the elimination of the dust or slime particles, and treatment of the same in the filter press plant described below, offers in the case of Kalgoorlie and similar ores special advantages. In many cases the author believes that filter presses might be advantageously substituted for decantation methods.

Considering the large number of industries successfully using filter presses for dealing with precipitates of a slimey nature which cannot be filtered by the ordinary percolation methods, even when the withdrawal of the liquid is assisted by a vacuum beneath the filter, it might have been anticipated that these appliances would have been more largely adopted for dealing with gold ore slimes than has hitherto been the case. Several previous attempts

Digitized by Google

have been made to employ filter presses for this purpose, but have not been very successful. Full particulars of the working of these plants have unfortunately not been recorded, but from such details as the author has been able to obtain the failure may apparently be traced to faulty design in the mechanical details of the plant.

The ore at the Hannan's Brownhill Mine having been dry crushed and passed through a 25 or 30-mesh sieve, is delivered to a Mumford and Moodie Separator,* which divides it into about equal quantities of (1) slimes, (2) sands. It is only proposed in this paper to describe the separation and the treatment of the first product, viz., the slimes.

The crushed ore, as it leaves the screens, is elevated into the Mumford and Moodie Separator (Fig. 1), and passes directly into the central conical hopper C without the intervention of any automatic feeding appliance. The intermittent discharge from the buckets of the elevator A does not materially interfere with the action of the separator, as owing to the length of the discharge shoot of the elevator, combined with the construction of the hopper C (which, when the supply is properly proportioned to the size of the machine, is kept with a certain amount of material at its delivery end), a regular stream enters the machine, the baffle disc B rotating with the centre spindle further assisting in an even distribution of material. The vertical spindle of the separator is driven by means of the cone pulley D and bevel gearing E, and imparts a rotary motion to the disc F and fan G. The material falling upon the disc F is thrown off by centrifugal action in a fine spray and subjected at the same time to the action of an air current induced by the fan G. This current carries off the lighter particles with it into the outer casing, where they settle down into the conical chamber and are ultimately discharged at I.

The coarse particles or sands fall down over the grid J against the action of the air current and collect in the inner chamber K, and are withdrawn as required through the spouts L or L'. The separation required can be regulated either by altering the speed at which the machine is driven, or by the adjustment of the circular damper M which regulates the amount of annular opening through which the air current circulates. With some ores a bumping arrangement has been found necessary in order to shake down the material, which tends to collect on the conical sides of the separator, even though these be constructed at a steep angle. Compared

* Commans on sizing of crushed minerals, *Proc. Inst. C.E.*, vol. cxvi, pp. 42, 43.

Digitized by Google

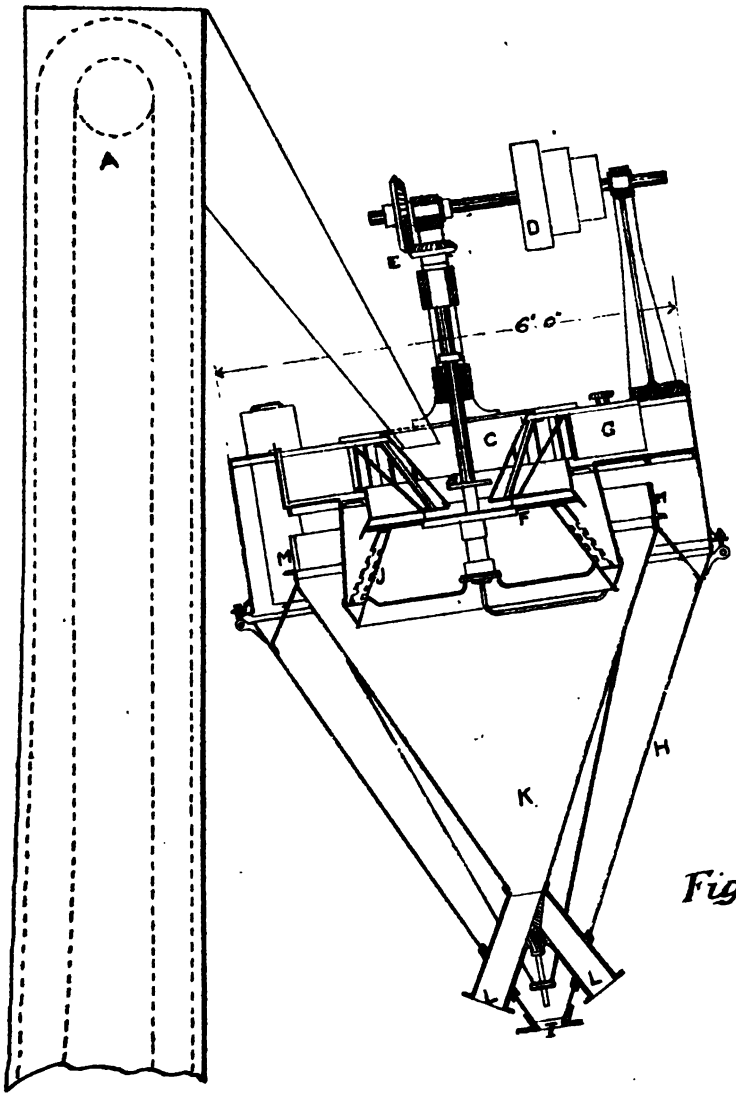


Fig. 1

Harrison & Sons Ltd.

Digitized by Google

Digitized by Google

with revolving or shaking screens, the Mumford and Moodie Separator offers the following advantages: (1) Absence of all screens which are liable to choke and require constant renewal; (2) easy adjustment and regulation of the size of the particles carried over; (3) the same air current continuously circulating within the machine, no dust escapes out of the apparatus.

From experiments conducted by the author upon oxidized ores from the Kalgoorlie Fields at the works of Messrs. Askham Bros. and Wilson, the makers of the separator, it was found that after reducing the ore by dry crushing so as to pass a 25 or 30-mesh screen, the fine dust particles or slimes could readily be separated. In some instances the sands assayed higher than the slimes, but no great importance can be attached to this concentration, as it evidently depends on the state of the gold, and if this were very fine the slimes might be found to be the richest. The separator cannot be regarded as a concentrator, but simply as an apparatus for withdrawing the fine dust or slime forming particles, whose surface is large in comparison to their weight. In many respects its action is similar to that of a hydraulic spitzkasten or pointed box. It may also be pointed out that all gold withdrawn with the slimes will necessarily be in a very fine state of division, and admirably suited for recovery by cyanide if the mechanical difficulty of filtration can be overcome.

The separation of the slimes from the crushed ore having been effected, either of the following methods, or a combination of them, could be used for the after treatment by the filter press: (1) Agitation of the slimes with cyanide solution and delivery of the sludge to the press, finally washing the charge in the press, or (2) if preliminary water or other washes be desirable, to agitate with the same, deliver the resulting sludge to the press, and effect the extraction of the gold with the charge in the press by passing through it the cyanide solution, finally washing the charge as before.

Fig. 2 shows the general arrangement of the filter press plant at Hannan's Brownhill. The slimes are introduced into the vats A and agitated by paddle with cyanide solution as long as may be found necessary to dissolve out the gold. The contents of the vat are then run into the receiver C and forced by means of compressed air at a pressure of 60 to 80 lb. per sq. in. into the filter presses, the filtrate or affluent from the presses being delivered through the pipe B into the vat E, from which it flows in a constant stream through the zinc precipitation boxes to the sumps. The cakes having been washed in position so as to remove any

Digitized by Google

cyanide solution they may contain, the press is opened and the cakes allowed to fall into the truck F for tramming to dump.

The pneumatic forcing receiver or montejus C consists of a cylindrical steel vessel with dished ends. The pipe leading from it to the press reaches almost to the bottom of the receiver, thus ensuring, as soon as the air pressure is turned on, the whole of the contents of the montejus being discharged into the press. Prior to discharging the receiver, the charge is stirred up by admitting a certain quantity of compressed air through a small pipe to the bottom of the receiver.

The filter presses are of the distance frame, flat plate, and four-eyed type, each press having 20 chambers forming cakes 28 in. square by 3 in. thick. From experiments made by the author at the works of Messrs. S. H. Johnson and Co., the manufacturers of the pressing plant at the Hannan's Brownhill Mine, it was found that with the slimes of some of the West Australian ores there is no difficulty in forming cakes of this thickness with ore that had been dry crushed. The cakes were examined by Mr. A. C. Claudet and found to carry 20 per cent. of moisture and to weigh about 130 lb. per cub. ft., from which figures it will be seen that one press treats per charge about 1¼ tons of dry slimes. The construction of the distance frames and of the two side plates, which when placed together form a complete element of the press, is shown in Figs. 3 to 6, the latter figure showing two elements in section. The views shown in Figs. 3, 4 and 5 are as they would appear when looking towards the press-head. The four holes, A, B, C, D, at the corners of the plates and distance frames correspond when they are placed together in position, and form passages throughout the whole series of plates in the press. In the sectional view, Fig. 6, E represents the distance frame shown in Fig. 5, and G and F, the side plates, are shown in Figs. 3 and 4. These side plates have cast upon their surfaces a series of fine grooves, so that when the filter cloth is placed over them they form channels for the liquid which is forced through the cloth to pass along and out at holes B (Fig. 3) and C (Fig. 4) in the corners of the plates. The operation of filling and washing a charge in the press is as follows:—The sludge is forced into the press from the receiver through the passage A by air pressure as described. This passage extends through the plates and communicates with the interior of the distance frame E as shown. The sludge continues to flow in until it completely fills the space K between the plates, the liquid being forced out by pressure through the filter cloths on either side of the plates, and passes

Digitized by Google

through the channels on the surfaces of the plates G and F to the openings B (Fig. 3) and C (Fig. 4) to the discharge pipe at the press head. The opening D would also serve for discharge of the effluent liquid during filling, but as it is connected up to the washing pump it is only used for the passage of wash-water. After the cell has become compacted with material and no more liquid issues, the sludge inlet A is shut and also the valve at B on the outside of the press. Water is then forced in at D and along the drainage channel on the surface of plate G through the filter cloth placed on this surface, and then through the cake, displacing the cyanide solution, and finally escaping through the filter cloth on the opposite side and out of the press through the opening C. The tightening gear and other details call for no remarks, as the designs may be widely varied without affecting the action of the press.

The chief advantages gained by the use of a press of the type described as compared with the usual type of press with recessed plates and central charging hole, mostly in use for sewage purposes, are that it permits of the cyanide solution contained in the cakes being effectively replaced by wash-water, and any desired thickness of cake secured by the width of the distance frame employed.

The question of the efficiency of washing and displacement of the cyanide solution contained in the cakes by the wash-water is one of great importance when dealing with rich slimes, and this point alone would be sufficient to warrant the employment of filter presses in preference to the decantation methods. Experiments carried out on 3-in. cakes show that the washing is most complete, and that uneven percolation does not take place. One simple experiment made to investigate this point was to saturate the cake with a brine solution having a specific gravity of 1·100, and then to wash out this brine solution with water, and observe the rapidity of the fall in the specific gravity of the wash-water as it issues from the press. The rapidity of this fall in specific gravity is a measure of the efficiency of the washing, for the drop is comparable to the displacement of the brine solution in the cake, because if channeling or uneven percolation through the cake had taken place, there would have been a slow fall in the specific gravity of the wash-water delivered by the press caused by the continual withdrawal of some of the brine solution. In many experiments it was found that a quantity of wash-water equal to little more than the cubic contents of the cake was sufficient to bring down the brine soluble to 1·001. It is to be regretted that

Digitized by Google

time did not permit of these experiments being followed by others in which the investigations were not only quantitative, but were accompanied by careful chemical analyses of the cakes and wash-water. The author has, however, from more than one authority received confirmation of the efficiency of the washing in filter presses, a comparatively small quantity of liquid being generally found sufficient, except when dealing with precipitates of a very difficult nature, and from which it was required to wash away the last trace of the mother liquor, conditions which do not usually occur in the treatment of gold ore slimes.

The author regrets that he is not able at this opportunity to lay before the Institution particulars of the cost of the treatment of slimes in filter presses by the Hannan's Brownhill plant, but an approximate estimate of some of the charges incurred can be made by comparing the expense of using presses in other industries. For example, in the treatment of sewage by the chemical precipitation process filter presses are very largely used, more presses being probably employed for this purpose than for any other industry, except possibly those used in the manufacture of beet sugar. The costs of the treatment of sewage in filter presses is stated by several authorities to vary from 2*s.* to 3*s.* a ton of pressed cake, including labour, lime, cloths, coal, &c.*

Mr. J. Croll gives the cost per ton of pressed cake at the Richmond Main Sewage Works as follows:—

| | |
|---|---|
| Labour ..... | 10*d.* |
| Lime ..... | 9 |
| Cloths ..... | 4 |
| Coal, oil, &c..... | 3 |
| | 2*s.* 2*d.* |

With strictly chemical industries the author is informed that the labour costs, with material weighing 60 to 70 lb. per cub. ft., do not exceed 8*d.* per ton, but the costs of other items for cloths, &c., are omitted from this paper, as the action of the chemical liquors are so different from that of cyanide solution that no comparison could be drawn between the two. It may reasonably be expected that the labour charges for the filter press treatment of gold ore slimes will, under favourable conditions, not be more than the figures given above, but with the present labour rates of West Australia the figures given may be exceeded.

* James Croll on filter presses for sewage sludge, *Society of Engineers*, October, 1897.

Digitized by Google

Chemical precipitates weighing 70 lb. per cub. ft., and sewage cakes weighing about 90 lb. per cub. ft., costing 8*d.* to 10*d.* per ton for labour, would seem to indicate that gold ore slimes weighing certainly not less than 1 cwt. per cub. ft. would cost for labour charges about 6*d.* to 8*d.* per ton of cake. The capacity and general arrangement of the plant will of course materially affect this figure.

As regards the time occupied and the extraction obtained in the filter presses, experiments made with 5 dwt. slimes at the time when the mill was first started gave tailings assaying 1 dwt. after three hours' agitation, and the following average time for the completion of the cycle of filtering, washing, emptying, and closing the press:—

| | |
|---|---|
| Filling press from receiver..... | 15 min. |
| Washing cakes in press ..... | 19 „ |
| Discharging and closing press ..... | 16 „ |
| | 50 „ |

In the treatment of slimes from ore that has been wet crushed, the mining engineer has successfully imitated the lime precipitation process now generally adopted in the treatment of sewage, and it would appear that he could with advantage take another lesson from the same source, by following the coagulation treatment by the manipulation of the sludge in filter presses, instead of by slow natural settlement and dilution washing. Mr. Charles Butters, in his Presidential Address to the Chemical and Metallurgical Society of South Africa at the beginning of this year, states that 6 to 8 tons of liquid are required by the decantation process for the treatment of 1 ton of slimes. One advantage of the filter press treatment is that the amount and strength of the cyanide solution can be regulated to suit the character of the ore under treatment; the amount of solution required for the usual cyanide filtration method, say one and a half times the weight of slimes, is sufficient to reduce the pulp to such consistency that it can be readily forced into the filter presses. In districts where water is not abundant the small amount of wash-water required is also of great importance, for by the use of the press a minimum amount is required to displace the cyanide solution contained in the cakes.

By the successful and economic separation of slimes and sands dry, without the aid of water, and the treatment of the separated slimes, the advocates of dry crushing processes may certainly

Digitized by Google

consider that their cause has received no mean impulse, for a process on these lines certainly enables the greater part of the float gold to be secured.

Generally, the author is of the opinion that the future will see filter presses more extensively used for the treatment of gold ore slimes, particularly in districts where water is scarce and where ores are of such a nature as to be difficult for ordinary filtration, on account of the excessive percentage of slimes produced when they are crushed. A filter press plant is not expensive for upkeep, requires very considerably less water, and will probably be found to give a greater extraction than any decantation methods.

---

## DISCUSSION.

**The President** said that the paper dealt with questions of slimes treatment which had been in a manner solved in other countries, but which the varying conditions of Western Australia had again brought to the front. The points made by the author (although not fully up to date as regarded the Hannan's Brownhill Mine itself) were sufficiently established to afford a good basis of discussion with the figures before them. They had with them that evening a number of authorities on the cyanide process, whom he was sure they would be glad to hear.

**Mr. J. H. Collins** said that he had had a good deal of experience in treating slimy material, such as the slimes of tin and lead ores and china clay, and had also had some experience with filter presses. It had always been surprising to him that the production of slimes in the crushing of ordinary gold ores should be held to be such a serious disadvantage. He agreed with the author that instead of trying to find machinery that would produce crushed ore without slimes, they should frankly go for the cheapest crushing, remembering that in most cases the gold was so extremely fine that it could never be recovered at all without making slimes. It appeared to him that, with a properly arranged system of separation and a suitable arrangement of filter presses, they would no longer be troubled with the slimes difficulty. He would be glad to know if the author could tell them something as to the cost of filter presses of given capacity. At present they seemed to be rather expensive, but he supposed that if a great demand arose for their use in the treatment of gold ores, they might look for a considerable reduction in cost.

Digitized by Google

It was at present a serious matter to contemplate the erection of filter presses, but it ought not to be so in the future.

**Mr. H. L. Sulman** said that the paper had interested him in view of the very wide field it opened up. The title of the paper well defined its scope, and having had some experience of the district with which it dealt, he considered that filter press treatment was a process well adapted for the peculiarly rich ores met with at Hannan's, which gave rise to a large amount of slimes in crushing. He could corroborate the author's statement as to the richness of the slimes, as at the Hannan's Brownhill under the old *régime* he had himself assayed the dust which had escaped from the mill and settled on the roof rafters, and found it to give as high a return as 3½ oz. to the ton, while at a distance of several hundred feet from the mill he had collected dust from the roofs of the houses in the camp which assayed 1 oz.

It appeared to him that the employment of filter presses demanded, first of all, dry crushing. He believed that, as far as practical experience had gone, it had been found impossible to apply the filter press, either by means of lime-coagulation, or other methods, to treat the slimes which escaped from stamp batteries. Mr. Butters, who was present, could, no doubt, tell them something as to this, but he believed he was correct in stating that up to the present filter press treatment had only been successful on dry crushed ore. That at once very considerably limited the use of filter presses. Again, dry crushing meant dry ore, and necessitated putting up dryers, entailing extra capital and working expenses.

He would be glad if Mr. McNeill could give them some of the recent conditions which governed the use of the filter press, especially in regard to the Hannan's Brownhill products. He had carried out some experiments on that particular ore, and found that what hindered the percolation was the very finest slimes, and if some 15 per cent. of these were removed by a system of decantation by spitzkasten, &c., the remaining 85 per cent. was readily leachable, and yielded a nearly perfect extraction with a cyanide solvent. In that way they would have to deal with only some 15 per cent. of slimes by lime settlement and treatment by cyanide afterwards, but he understood that at Hannan's Brownhill it was now necessary to include in the filter-pressed slimes some 50 per cent. of the ore, that is to say, in order to get 50 per cent. of sharp sandy product by air separation methods, they had to treat the remaining 50 per cent. as slimes. He had had the opportunity of seeing the experiments carried out by the London and Hamburg



Digitized by Google

Gold Recovery Company at Hamburg, and it was there found that when only the very finest slimes of all were removed by water these liquors would not pass through the filter press, the cloths of which rapidly choked, and it became necessary to include some 30 per cent. of the fine sands with the slimes to obtain a leachable product. These considerations, in his opinion, seriously limited the use of filter presses on slimy ores.

The separators referred to by the author were also used at the Del Oro Mill, in Canada, where the ore was crushed by Krupp ball mills, after which it was submitted to the action of the air separator. Some 40 per cent. of the total amount of ore was separated as slimes, and for a time regarded as such, but it was found that when these air separated slimes were passed through simple spitzkasten some two-thirds fell out as sharp sands, freely leachable, leaving only one-third of absolute slimes suspended in the water, which only contained a few grains of gold per ton on the original ore. The gist of the whole matter was the question of cost. In a week or two they would be in possession of the results from the plant at the Hannan's Brownhill, where filter presses were being largely used, but it seemed that they ought to have more complete figures than the author had been able to supply.

In his paper Mr. McNeill had referred to the treatment of sewage at the Richmond sewage works, and gave the cost as 2*s.* 2*d.* per ton of material handled. The author had pointed out that the labour figures might be looked to increase in West Australia, but English labour could certainly be obtained for work of that description for 15*s.* a week, whilst at Hannan's the commonest surface labour was £3 10*s.* If they took labour costs four times greater than the amount allowed in England (10*d.*), the cost of this alone would be 3*s.* 4*d.*, and the total cost 4*s.* 8*d.* per ton. That was a large amount, and upon poor slimes it would be a very serious consideration, and more especially so if filter presses had to be used for dealing with wet crushed ore. That would mean, first, a separation of the fine slimes by means of lime-coagulation and decantation, filter pressing to remove the water, and finally treating with cyanide and again filter pressing. Such treatment upon the slimes of 3 or 4 dwt. on the Rand would at once consume 2 dwt. of the gold as cost, and it therefore seemed to him that filter pressing must be put out of consideration as regarded wet crushed ores. Mr. McNeill had a much better case in advocating the employment of filter presses in the particular district of Hannan's, where the ores were so rich, where slimes run frequently to several ounces to the ton, where water was scarce,

Digitized by Google

and where, in a word, the ore was particularly suited to and would pay for such treatment; but it was still an open question whether the method could profitably treat poorer slimes.

**Mr. Alfred James** asked if the author could give them any results of the effectiveness of the washing. The experiment described in the paper, in which the cake was saturated with a salt solution and then fresh water sent through the press, did not seem to him to be conclusive; on the contrary, if the water forced a channel for itself it would at once come out at a much lower specific gravity. The rapid fall in the specific gravity of the wash water tended to show that a channel might have been formed at once, rather than that a good washing of the cake was effected. With regard to air separation, he had seen samples which gave an exceedingly coarse product. He knew of a much finer product which was being treated by cyanide direct, which leached perfectly; it was much finer than 67—he understood that 85 per cent. passed a 90-mesh. He was also aware of direct cyaniding on very finely crushed ore of which 93 per cent. passed a 90-mesh, and he thought that that point raised the whole question. It was just possible that the cakes in the filter press would leach satisfactorily owing to the large amount of sand contained in them, while at other places filter presses had been thrown out on account of the fine gold slimes forming a thin layer on the cloths which formed an impalpable cake. Therefore he considered that the result given in the paper, which tended to show that washing could be effected, and which was probably due to the very large percentage of sand in the slimes, raised the whole question. He would like to know whether any experiment had been tried to show whether the stuff would not percolate quite satisfactorily without any separation of the fines at all. He had a sample of these slimes sent him some time ago, and they percolated quite satisfactorily and gave a high extraction without any separation of the fines whatever. Not being satisfied with that, he sent it to someone else who tried it with equally satisfactory results. The slimes were so tenacious that they required eight times the amount of water to wash out all the gold. There was also a considerable amount of coarse gold, and, as it was necessary in all slimes processes in which agitation was employed, to dissolve that gold as rapidly as possible to save the horse-power required in agitation, they found it necessary to add an oxidizer or bromocyanide; ordinary cyanide, owing to the coarseness of the gold, taking too long a time. The gentleman to whom he sent the sample of slimes reported favourably on its treatment by decanta-



Digitized by Google

tion, and stated that from the worst slimes which assayed 3 oz. an extraction of 2 oz. 17 dwt. had been obtained, but he added that it would appear that the slimes could be dealt with fairly well by ordinary percolation, aided, if necessary, by suction. If such a method, or either of them, could be so readily employed, the expensive and awkward method of filter pressing would be rendered quite unnecessary. He would be glad to know if the author had any experience in this direction, and what results he had obtained.

Perhaps some one who had been in South Africa more recently than himself could give them the aspect of the case there. When he was there they had one advocate for filter press treatment as contrasted with the decantation and coagulation method. He referred to Mr. Bettel, who was firmly in favour of filter presses, and he thought it a most significant sign of the times that that gentleman seemed to have entirely given up the filter press idea and adopted the other method.

**Mr. Charles Butters** said that he had listened to the paper with great interest, because he had always been anxious to learn something about filter presses. He had never had an opportunity of working a filter press nor of seeing one operating on such a large scale as would warrant its being adopted on the Rand. When he commenced, several years ago, to think about the treatment of slimes on the Rand, Mr. Bettel was his assistant, and they were most anxious to arrive at some method of handling the enormous volume of material that was being stored there, and the one thing which put him off filter presses was the tremendous quantity of stuff they had to handle. It was accumulating all round by the acre; the dams of slimes were five to six acres in extent, and rising a foot almost every month. This rate of accumulation made the idea of putting it through a filter press disheartening. At the time he was referring to he was employed at the Robinson Mine, and on Mr. Bettel's suggestion the Robinson Company sent out two filter presses, which cost about £6,000. They were never set up, and he had no experience of their working; consequently he was not an authority on the subject or prepared to say anything for or against filter presses. His opinion would therefore carry no weight, and he was inclined to think that the author's testimony was also of the same value, because, as far as he could see, looking through the paper, Mr. McNeill had treated a very small quantity of material by filter presses, and no actual results were given in the paper. He should have been glad to have had some figures before him in order to form a judg-

Digitized by Google

ment, but the paper simply appeared to be of an academic nature, quite theoretical, and based apparently upon the results of one kind of material only which had been treated by the author. He understood that later on they would be getting definite results from Australia, and he would then be pleased to have actual figures which would enable them to decide the matter. Personally he was very slow to form any opinion on any of these subjects; as far as he was concerned he did not think of writing anything about the treatment of slimes until he had spent £75,000 in doing so, and had treated 100,000 tons, and, even then, he was not quite sure that he knew much about it. It was a very difficult subject, and when slimes had to be treated on a large scale many problems presented themselves.

When he was on the Witwatersrand they were treating about 33,000 tons a month by the decantation method, and in some of the plants they were getting a fairly high extraction; he believed that at the Geldenhuis Estate something like 70 to 80 per cent. extraction was obtained. He under-estimated the difficulties of slime treatment, although after he had built the Robinson plant and run it for two years he thought he knew something about it. He obtained an extraction of 43 per cent. from the first 37,000 tons treated by the decantation method; that was not very good, and he had forgotten how much money they had lost on that occasion. He then ran another six months, putting through 30,000 tons, and obtaining 57 per cent. After that they built the Simmer and Jack plant, where they were supposed to have 3½ dwt. to deal with, which came down about 2½ to 3 dwt. As far as the Rand was concerned, they might consider that 25 per cent. of the material crushed would be slimes, and, if they were crushing 500,000 tons a month, there would be 125,000 tons of slimes to be treated every month, and to put that amount through filter presses meant a lot of work. The filter press idea was adopted in a good many of the leaching and chemical processes, and in nearly every case pressure filtering was resorted to. There was hardly an instance of a process which had come forward that had not a patent pressure filter, working either by suction below or pressure above. It was a good thing for the machinery agent, who got the best of the business, but it had been found that it did not cost very much to build a vat and let it filter through, even if took a week or two to do so. The time occupied did not make much difference, and it was found just as well to do it in a natural manner. There was no use in using bromo-cyanide to do it quickly when simple cyanide would do just as well, nor in sucking it through when it would

Digitized by Google

run through by itself and save the cost of sucking. When he constructed the slime works at the Robinson Mine he put in a suction plant with eight tanks calculated to treat 100 tons a day; he put in almost enough machinery to sink a ship, but afterwards pulled it all out, and £75,000 to £80,000 was spent. The reason was that the machinery was not needed, and they might depend upon it that when machinery was put in which was not required it would be pulled out sooner or later. The author laid stress upon the filter presses being useful in the absence of water, and of course that was a difficulty which had not to be contended with in South Africa. On the Rand, for every ton of slimes treated they had to throw away 50 per cent. of water, and that of course would not be possible in Western Australia, as they had not the water to throw away. In almost all countries, excepting Western Australia, they could afford to throw away a ton of water to the ton of slimes, therefore wherever water was available filter presses would be thrown out. The question of cost was not mentioned in the paper, but it cost them in South Africa about 4*s.* a ton to complete their slime treatment, and they hoped they would be able to get it down to 2*s.* 6*d.*, including everything. The only cost which the author had given referred to the filter pressing, but that was only one item and equal to the settling he had carried out in South Africa. If they asked him what it cost to settle his stuff, he could only say that it cost a week. He should say that filter press treatment was good in Western Australia for slimes that went about 1 oz., and it would therefore be out of the question in South Africa. The bulk of the slimes on the Rand went about 3 dwt., and, as they on the Rand had worked out a method, so those in Western Australia would have to do the same, but natural settlement would have to be the process for any country where there was available water enough to afford a ton of water to the ton of slimes.

**Mr. A. C. Claudet** said that at one time he had had some experience with filter presses, and unless good reasons were given, and more so than the author gave in his paper, he should never think of adopting them for the treatment of large quantities of material, if there was any other way of doing so. He did not agree with the author as to the wear and tear of the filtering fabric. He believed it would wear just as quickly as if they were treating ordinary chemical liquors, owing to the pressure put upon them, and the damage done by the men working the presses. He would like to hear from the author, supposing he had 200 tons of dried slimes per day, separated by machine, how many filter

Digitized by Google

presses would be required to treat that amount? Filter presses were not continuous machines, and he had no doubt that if a press could be devised which was continuous, and a minimum of labour were used in attending to them, they might do well under certain circumstances. They had to remember, however, that in Western Australia they were dealing with ores which contained from 1 to 2 oz. to the ton, while in the Transvaal they were dealing with 5 or 7 dwt.; in the case of the former country they could, of course, use a more expensive method of treatment than was possible in the latter, but the costs would, in his opinion, be excessive. At the same time the question occurred to him, why use the filter press at all when there was an obvious way out of the difficulty? Whether it would be an expensive matter he did not know, but by heating the ore to a temperature which would destroy the water in the clay, leaching became easy, and a very high extraction could be obtained, and separation of coarse from fines was unnecesary.

**Mr. S. H. Johnson** said that he did not profess to have had practical experience in treating slimes except in an experimental way, but could speak with some authority regarding the economy of working with filter presses. There was no difficulty whatever in treating any quantity of material by filter presses, and the cost, not only of the installation but also the working, of the plant was not as excessive as it might appear. Mr. Butters had referred to the fact that by natural subsidence very large quantities of material could be treated in very large vats, but that took a long time, and taking his estimate of one week as against a filter press effecting the same object in one hour, it was just 168 times as long, so that the charge of the vat would be 168 times more than that of the filter press, and therefore the proportion must be as between a filter press of, say, 1 ton as against a vat that would deal with 168 tons. The cost of a very much larger plant on the vat system of natural subsidence, as compared with the very much smaller although more expensive plant for filter-pressing, would not be so divergent as would appear from Mr. Butters' remarks.

**The President** asked what would be the cost of seven filter presses, supposing that to be equal to the work of one vat.

**Mr. Johnson** replied that, without the machinery to charge them, seven presses would cost about £800.

**Mr. Butters** remarked that a vat erected in South Africa to do the same amount of work would cost about £900.

**Professor Huntington** inquired as to the size of the filter presses.

Digitized by Google

**Mr. Johnson**, continuing, said that there would not be a great deal of difference between the vat and the filter presses. He had not included the means of filling in his price, which would add to the cost.

In reply to Professor Huntington, he had put up three filter presses to deal with 2,000 tons a week; they were 5 ft. in diameter, with about 24 chambers, making cakes 4 in. thick, and were capable, as he had stated, of dealing with 2,000 tons of residue containing 25 per cent. of moisture.

With regard to working, in comparing the two systems it should be borne in mind that in the costs mentioned by Mr. McNeill the amount charged to labour was for working the filter presses. That sum included the filling of the presses, which was done by a pump, as compared with filling the vat by hand. Everyone would admit that it was cheaper to do it by a pump. The labour charge also included emptying and charging into trucks, while if they had to empty a large quantity of slimy material from a vat it became a very expensive operation.

**Mr. Butters** remarked that 625 tons could be done in three or four hours, and the vat was filled by a pump.

**Mr. Johnson** said that in the costs of dealing with sewage which Mr. McNeill had given there was an item of 9*d.* for lime, which would not be required in the case in question.

**Mr. Butters** observed that the lime would be required just the same, as the stuff had to be coagulated.

**Mr. Johnson** said that with regard to cloths, there was scarcely any process which was more destructive to cloths than the filtration of sewage, and a new set was required every month. He took it that the number of filtrations which could be effected through a set of cloths with slimes would be very much larger than in the case of sewage sludge, and therefore the cost in that direction would be proportionately reduced. The costs given also included coal, and taking those matters into consideration, he should think the cost of dealing with gold slimes in this country could be reduced to 1*s.* 2*d.* as against the price of 2*s.* 2*d.* for dealing with sewage sludge. It was easy to make a correction for the different value of labour in other parts of the world, in order to get a correct estimate of the cost. He could not agree with Mr. Sulman's estimate of 4*s.* 8*d.*, and was of opinion it would be about one quarter of that amount. He thought that the working of filter presses was misunderstood; if they wanted to get operations cheaply performed, he did not think there was a better method than by filter pressing. It was inconvenient to have large quan-

Digitized by Google

tities of sludge filling up the land, and filter pressing greatly facilitated its being carted away and dumped where it would not be a nuisance. In the case of sewage, the volume of the sludge was five times that of the pressed cake, which at once reduced the expense of carting. Dealing with semi-liquid material was very much more expensive than with solid material.

**Mr. Butters** remarked that on the Rand they hydraulicked it, allowing it to flow away from the vat; therefore Mr. Johnson's method would not be a point in its favour.

**Mr. Johnson** said that objection had been taken to the fact that 50 per cent. of the ore had to be treated in the filter presses. He considered that the proper method was, in many cases, to treat the whole of the ore, especially those that were in a fine state of division, or which, when crushed, produced a large quantity of very fine powder.

**Mr. James** desired to explain that the ore which he had referred to in his remarks was Brownhill ore, and had been heated to 200° before crushing. The quantity treated was about 1 cwt.

**Mr. Sulman** remarked that he treated 10 tons by direct leaching. Unless some of the slimes were removed, the leaching stopped; but the reverse was the case with Hannan's Brownhill ore after heating to 250° C. The ore did not require to be heated to redness, but it had to be dehydrated, and a fairly leachable product was obtained, but it was just as well to remove a small proportion of the limonite, which otherwise floated to the top of the charge, and formed an impalpable layer, and hermetically sealed the top of the tank. While it was in that condition they could allow the leaching process to go on for five weeks, while if the layer was removed it would leach perfectly well.

**Mr. Butters** thought that filter presses would only be used in cases of absolute necessity; so long as leaching was possible, filter presses would not be required, and it was only when they had to deal with an impalpable powder and could not leach that filter presses would be used. The case of Western Australia was different, as they had not enough water.

**Mr. Fairley** thought that before any discussion could take place on such a paper, a number of other details were necessary. It was desirable to know the quantity of moisture in the slimes before entering the press, and he should say from the figures given in the paper that the slimes dealt with contained a very large amount of porous or gritty matter. With regard to the cost of labour, which was given as 10*d.*, he thought it was unusually high, and in ordinary cases it might be reduced by 25 per cent. He

Digitized by Google

was not acquainted with the chemicals used in the treatment of gold ores, but in the case of sewage the action of the lime and other chemicals appeared to rot the cloths, and they fell to pieces in three or four weeks. They would probably not be deteriorated so rapidly in the case of gold ore treatment, as he knew a number of other industries in which filter presses were employed, and the cloths lasted five or six times as long as when used in sewage works.

**Mr. E. A. Ashcroft** said that in his opinion the whole crux of the question was the nature of the mud that was being dealt with; one material would filter quite easily and very cheaply with a small plant, while another would not filter at all. The cost of working might be anything, from 2*s.* to 20*s.* per ton, and the only way to determine the cost was to make a practical experiment with the exact conditions under which the work would be carried on. He could give them some figures as to cost for labour and steam power; he had treated 1,000 tons of rich arsenical and sulphide ores containing zinc and lead for 4*s.* a ton, including everything except stores and cloths. The cloths did not deteriorate very rapidly, especially if work was continuous and on a large scale.

**The President**, in closing the discussion, said that it appeared to him that Mr. Sulman had hit the keynote in stating that one had to bear in mind the title of the paper, in order to properly discuss it. At the same time the question naturally arose, in view of the advantages claimed for the process, as to whether it could not be applied more generally in other parts of the world, which Mr. Butters had effectively disposed of as regards the Rand, by pointing out that the conditions existing there made it absolutely impossible to consider the filter press.

The matter of wet crushing as compared with dry crushing was a large subject, and would not be necessarily determined in any way by the question of how the slimes could be treated. It appeared that under favourable conditions, on the ordinary grade of gold ores as treated by wet crushing, it had been established that the successful treatment was gravitation leaching, and, as Mr. Butters had said, if machinery could be dispensed with it would be done away with. No one would use dry crushing if the conditions permitted of wet crushing, and as, for the greater part of the gold ores of the world, dry crushing was put out of court, there did not appear to be a very extended field for the use of filter presses.

The explanation given of the satisfactory work done in the case

Digitized by Google

of the Hannan's Brownhill—that there was more grit in the material treated and it was not a true slime—did not, in his opinion, necessarily argue against the successful use of filter presses. If they separated a certain quantity of pure slimes, and found that it could not be treated by gravitation or by the filter press, it might be advisable, from a commercial point of view, to let some grit go with the slimes. Such means had been recognised on the Rand, where they mixed a certain amount of coarse stuff with the slimes, so as to make percolation easy, and he considered it to be quite legitimate, seeing that the slimes could not be treated direct, to let a little sand go with it.

The question whether filter pressing was necessary at all on slimes after dry crushing was not a matter of opinion but of fact. The question was, could the mixture of Hannan's ore, after ordinary drying and dry crushing, be leached direct, as Mr. James had indicated. The slimes from Hannan's ore, both in quantity and quality, were very different from the slimes of an ordinary quartz vein. The figures suggested by Mr. James when he stated that he had leached direct a pulp which contained 93 per cent. which would pass a 90-mesh (whereas in the case in question only 85 per cent. would pass a 90-mesh) did not, in his opinion, settle the question. They had to consider what the slimes consisted of, and the mere sizing was not sufficient to determine the relative permeability to solutions. The question of the presence of a small amount of deleterious substance, such as clay or talc, could not be determined in advance, but was a matter for experiment; it was like the minority element in cucumbers—90 per cent. was water, but the other 10 per cent. was very deadly! Experience in New Zealand had shown that an ore could be crushed dry and the whole of it leached by percolation without difficulty, from the very fact that after dry crushing the intermixture of the fines and coarse allowed a treatment which was not possible if the stuff was wetted. He thought it must be accepted as a fact that in the dry crushed ores of the Hannan's district they had a product which was not, as a whole, adapted for treatment by direct leaching without a separation of the slimes. The ores of the district in question were so rich that their value permitted liberties being taken with their treatment such as was not possible with most gold ores. Again, there was the water question, which was a very important one. Those working in the Hannan's district had to combat difficulties which did not exist in other countries, but the ore was of such value that they could be profitably overcome.

He had listened with much interest to Mr. Butters's remarks as

Digitized by Google

to his experience of the Rand, and thought that he had summarised the situation very accurately. Mr. Butters had been very modest in his statement as to how much he had still to learn, but he was glad to see he had learned a good deal in spite of his modesty.

He would like to ask Mr. McNeill whether, in the case of the Lake View Mine, where he understood a filter press plant had been put up, they had applied the process to the slimes of the wet crushing mill.

**Mr. McNeill,** in reply, said he thought the President had dealt with most of the points raised, and had well expressed what would have been his own opinion upon them. The separator could be regulated to effect any desired degree of separation, and, as far as it had been at work, it was found that the material withdrawn contained the gold in such a state that it was soluble in a very short time; the heavier particles dropped down into the inner cone, and the lighter particles (even if larger than the finest slime) were drawn off by the air current.

As to Mr. Collins's remarks about the price of the presses, Mr. Johnson had dealt with that point.

With regard to Mr. Sulman's observations as to the treatment of wet crushed ores, there was of course a great deal of difference between treating stuff that had been wet crushed and that which had been dry crushed, and it would be more difficult to filter-press the wet crushed stuff. He had no definite information as to how the presses had been worked at the Lake View Mine, but believed they were treating stuff that had been wet crushed; they had five presses at work, and he understood that they filter-pressed the whole of the stuff.

As to costs, several different opinions, from 1*s.* 2*d.* to 4*s.*, had been expressed, but each individual case would vary in accordance with the local conditions. No comparison could be drawn between the treatment of zinc ores and that of gold ores, as he understood that the former included certain chemicals as well as labour.

With regard to percolation, it had been stated by many authorities that the Hannan's ores were not leachable, and that even after dry crushing they required that a certain percentage should be removed to make them percolable.

With reference to Mr. James's remarks as to the efficiency of the washing, he pointed out in the paper that he regretted that time did not permit of carrying out chemical experiments to corroborate what he had stated. In his opinion, if channelling had taken place there would have been a gradual removal of the

Digitized by Google

brine contained in the cake, and not the sudden fall in specific gravity which was recorded in the paper.

The following paper was then read:—

## "The Portable Mono-rail Transport System."

By C. C. Hoyer Millar, Assoc. Inst.M.M.

The chief feature of this new system of transport consists in the employment of one line of rail in place of two as adopted by most light railways. The rails, instead of being attached to sleepers, are held in position by a number of steel cross-plates (*traverses*) about 9 in. in length, and one to every 3 ft. of rail. These are fastened to the rail in a simple and effective manner by two projections fixed diagonally on the plates. The plates, after being put on the rail diagonally so that the projections overlap the lower flanges of the rail, are given a turn until they are at right angles and the projections clasp the flanges firmly on either side. A bolt is then added, and a nut screwed on below the plate, which is thus prevented from moving. The rails are joined together by a splice (*éclisse*), which fits the lower part of the rail, and is slid along so as to cover the joints. At first sight these cross-plates would appear to be insufficient, but further consideration shows that the leverage on the rail from the cars can only be very slight, and that the cross-plates are more than sufficient to keep the rail rigid and upright.

The cars, which are of various shapes and sizes according to the material required to be conveyed, run on two wheels of small diameter, one ahead and one behind the car box, and when in motion balance easily on the rail.

The motive power, whether manual or animal, is applied to a rod which projects from the back line of the car at right angles to the line of rail. This motor rod being telescopic can be lengthened at will, to suit convenience. The secret of the balance is that the rod acts as a lever, and having only to equalise any uneven distribution of the load keeps the car steady with a minimum of power.

The bottom of the car is a few inches only above the rail, and underneath each side a semi-circular iron projection is affixed, so

Digitized by Google

that when at rest and during loading the car lies at any easy angle.

The arrangement of the various cars, and the size and position of the wheels, have only been arrived at after a long series of experiments, and the types now adopted show a marked increase in efficiency, both as regards packing capacity and ease of handling and movement, over the original patterns, all of which were exhibited to and carefully examined by the author in detail. A large assortment of cars has been constructed, comprising simple box cars, mineral dump cars, large hay cars, long cars for transporting rails or lumber, and tramcars capable of holding eight passengers. All these cars are designed either for manual or animal traction, and the harnessing facilities for the latter are peculiarly simple.

Having thus given a general description of the Mono-rail system, the question of advantages over existing systems has now to be considered.

The paramount advantage of the Mono-rail is that no road bed requires to be made, whereby an enormous economy is at once introduced. The rails can be laid with a minimum of preparation, provided that care is taken to see that the cross-plates lie on even and firm ground. A rough trail on one side is all that is required for man or beast. Another advantage is the speed with which the line can be laid. The cross-plates and splices having been affixed, the line is laid along the selected route at a speed with which no other system can compare, and at a cost for labour which, under normal conditions, works out at between £12 and £15 per mile. About 50 yd. of rail were laid for the author in a few minutes on a flat field, and a tramcar was driven over the line immediately, without any further adjustment, and the rails kept their position. Next comes the question of cost and weight. The author is informed that the first cost is about two-thirds that of the Decauville system, while the weight is only one-third, which means a very large saving when the rails have to be taken long distances before being laid down. The adjustment of the cross-plates and bolts can be done by boys, and no tool is wanted to fix either the bolts or splices, which are easily operated with the hand. The cars are taken to pieces and packed in cases for shipment, and as all the bolts are interchangeable the reconstruction of the cars is simple. Where the plant has to be transported by hand or animal, the parts are packed in a manner suitable for such carriage.

For junction and switching purposes, simple devices are used,

Digitized by Google

and a car can be shifted off the line to one side on a temporarily laid rail at a moment's notice. For the long cars two bogies, each with two wheels, are employed, thereby obviating any friction at the curves. The rails, being light, can be bent without difficulty to any curve required, but they can be used without bending for any curve whose radius is not less than 40 ft., since the flat of the wheel is sufficiently wide to prevent excess friction.

On level ground, the maximum load for a man to work for 10 hours per day with ease and efficiency is 8 cwt., and for a horse 2 tons. On an incline of one in twenty, the equivalent load for a man is 2 cwt. and for a horse 1 ton. For down-hill work a strong brake acts upon the flat of the wheels, and is thoroughly effective.

In dealing now with the applicability of this system to the mining industry, it is not within the range of this short sketch to go into the minute details, which must vary according to the local requirements of each mine; consequently the author can only point out a few features showing its general bearing on the industry.

It is well known that there are many rich reefs and deposits which cannot be worked owing to their great distance from railroads. Mexico is a country to which this fact peculiarly applies, where the prospector has constantly been obliged to abandon a rich strike owing to the impossibility of transporting machinery, supplies, &c., at a reasonable cost. There are many regions in British Columbia only awaiting transport facilities before their riches can be extracted.

Thus we find on the one hand mines that cannot be developed until railroads are built, and on the other hand projected railroads which cannot be constructed until the mines give a certainty of paying traffic. In such cases it is the miner who suffers, for as he is *par excellence* the most sanguine of mortals, so on the other hand is the railroad projector the most conservative.

The great expense of constructing any railroad lies in the necessity for a road bed, but as the Mono-rail requires no road-bed, this—the paramount obstacle—totally disappears. Furthermore, since the Mono-rail can be laid down at an outlay of about one-tenth of its first cost, it follows that the risk is reduced to a minimum, for it can at any time be taken up and relaid elsewhere should its services be no longer required in the original locality.

Digitized by Google

## DISCUSSION.

**The President** thought Mr. Millar's paper would be a very useful addition to the *Transactions*, as bringing before the members a convenient form of putting down a temporary means of transport in countries where the grade would permit of it, and cheapness was an object. It appeared to him to be half-way between a wagon road and mule back.

**Mr. A. C. Claudet** said that he did not see how the mono-rail system could be compared with the proposed 150-mile railway to the Yukon with a double track. In one case an engine would be used, and in the other it could not. He would like to know what power was used.

**Mr. Millar** said that there was no necessity for the double track of the proposed Yukon railway; the mono-rail would carry everything that was required. The power used was mules, horses, or men.

**Mr. Claudet** said that in that case they could not compete with an ordinary railway line.

**The President** pointed out that the idea was that it would really transport all that was wanted, but was not intended as a permanency. In some of the tropical countries, weights had to be carried on men's backs, and in such places the system would be of great utility.

**Mr. Butters** asked what was the limit of weight that could be carried, and whether more than two cars could be used.

**Mr. Millar** replied that the strength of the mule was the limit of weight, and not more than two cars could be used with one mule.

**Mr. Butters** said he considered it was a very ingenious system and in many places extremely useful. He had had to transport a tremendous quantity of material in cases where it would not pay to put down a light railway, but a system such as that before them would have been the very thing. It was cheaper than a road, and he congratulated the author on its ingenuity.

**The President** thought there were many occasions where the system would be useful as well as in mining.

With regard to the other papers before the meeting, they would be taken as read. In connection with Mr. Porter's paper, "On the Occurrence of Diamonds in New South Wales,"

Digitized by Google

Mr. Mactear had sent him two specimens, which he had obtained from N.S.W., for exhibition at the meeting. He had also written as follows. . . . "The two specimens sent will, doubtless, interest the members, and you might also call attention to the fact that although the diamonds hitherto obtained are nearly all small, the yield in carats is much higher than in the Kimberley mines. There is a strong belief amongst the mine owners that the large stones are stolen, and of course the method of working, and the fact that the miners will not submit to be searched, makes this somewhat probable."

## "On the Occurrence of Diamonds at Inverell, New South Wales."

By H. M. Porter, M.Inst.MM.

Highly payable diamondiferous wash has recently been found in several places in the Inverell district, notably at Boggy Camp, 15 miles south-east of the town of Inverell.

The first diamond seen by the writer in the Inverell district was in September, 1872, when one was found in Maid's Creek, near the junction of that watercourse with the Gwydir River, while prospecting for stream tin, within 1 mile of Daisey's claim, now being worked for diamonds with considerable success, and is the most eastern point on this particular river system where diamonds have been discovered. Several so-called diamonds discovered in the valley of the Gwydir, east of Daisey's Mine, have proved to be zircons.

Taking this mine as a starting point, it is found that diamonds occur there in alluvial wash, covered by about 20 ft. of basalt, and within a short distance of the eastern edge of the basalt, the point of eruption from which the basalt exuded being very marked.

The fall of the country, and following the valley of the Gwydir, from this point is westerly, Bingera being about 30 miles distant, the latter place being approximately 1,000 ft. below Daisey's, giving a fall of about 30 ft. per mile. Through this tract of country wash containing diamonds, overlaid by basalt, occurs in isolated patches, but there is no doubt it is one and the same river system; the river has, however, again denuded a considerable portion of the basalt in places and exposed the wash, the phe-



Digitized by Google

nomenal yield from some of the outcrops evidently being through a natural sluicing of the bed as the river cut through it.

The associated minerals: tourmaline, topaz, spinelle, garnet, sapphire, and quartz in the gravels both at the Inverell field and at Bingera are the same, with the exception that those at the latter place are smaller, and show a much more abraded appearance, giving evidence of transportation.

Referring again to Daisey's Mine, which is nearly on the eastern end of the basalt, the wash rests on a very soft decomposed granite. Overlying the wash in various places at Boggy Camp, more especially where the basalt has come in contact with the wash, is a cemented band of gravel; diamonds have been found embedded in this cement, and it has been suggested that this is a conglomerate which has been detached from some main body, and that it is probably the matrix of the diamond, and has been brought to its present position by the action of water; this the writer considers to be an erroneous idea, the cemented band being, in his opinion, caused by the highly heated lava flowing over the gravel, the ferruginous matter, of which it is largely composed, being derived from the basalt.

In some places a conglomerate occurs in shafts sunk in the basalt, but this is purely volcanic, the well rounded and smooth portions consisting of the same material as the enclosing matter.

East of this mine and flanking the Bora range is a belt of carboniferous mud-stone. East of this again is one of the main granite bosses of New England which, roughly speaking, covers an area of about 20 sq. miles; all the watercourses within this area have been worked for stream tin; the writer does not know that any diamonds were ever found in it.

Within this area are several stanniferous leads covered by basalt, the writer being one of the first to pierce the basalt in search of alluvial tin, and afterwards worked these leads for about eight years; during that time he only succeeded in obtaining one diamond, although the machines were searched daily for gems, and this one was from a lead which has the appearance of belonging to the McIntyre river system, not the Gwydir. He does not think therefore that the source of the diamond in the district is likely to be found still farther east on the main dividing range.

Again, he intersected the same bed of wash as Daisey's, half a mile north-east of their mine, and although the associated minerals found in the diamondiferous wash were present, no diamonds were found, although 50 loads were passed through the

Digitized by Google

machines; taking this into consideration, also the richness of Daisey's Mine, in the immediate vicinity, which up to the present time has eclipsed all mines west of it, the writer concludes that the source of the diamond is not far east of this mine.

Mr. Pittman, the New South Wales Government Geologist, states in his official report on the district that 42 loads of wash-dirt yielded 600 carats, and that 1 load gave 515 diamonds, weighing 184 carats, from Daisey's claim. The writer saw 60 carats got from two buckets of wash taken from the bottom of a shaft while he was examining it.

Most of the stones found in the neighbourhood of Boggy Camp are of perfect crystallisation, and vary in size from 16 to the carat up to stones of 3 carats. Larger stones are reputed to have been found, but the writer has no personal knowledge of them. It is true, chips of varying sizes have been found, one of a fine straw colour and triangular in shape was evidently from a stone of about 15 carats.

Large stones have not been looked for, the grating or hopper plates used in breaking down the dirt not allowing anything over ¼ in. to pass into the washing machines, which are the ordinary pulsators. All the pebbles and hard lumps of cement and wash which will not pass through the hopper plate holes or grating are thrown aside as worthless and never examined or rewashed.

The heap of these pebbles, &c., is either washed away by the next freshet in the creek or covered up by the siftings from the machines. The washing appliances are crude and ineffective, as diamonds have been found in the tail race, having passed through the machines. The stones found are of all tints, from lustrous black (a beautiful stone of 1½ carats of this colour was got) to purest white, bronze, blue tint, green tint, rose coloured, deep orange, light orange, lemon colour, straw colour, and all intermediate shades are found. The shapes are various, chiefly octahedrons, near Boggy Camp, rounded stones and chips further west. Macles and twin stones have also been found at Boggy Camp. Altogether the writer estimates that about 20,000 carats have been obtained at Boggy Camp.

The late Mr. C. S. Wilkinson was of opinion that the diamonds had been formed in the gravels where found, but in view of the chips found in some of the shallow workings, the writer is of opinion that this is not so, but that the line of contact of the mud-stone and granite is probably the source, and the river system having crossed this line of contact accounts for the presence of the diamond in its gravel west but not east of it.



Digitized by Google

The diamonds also in this particular locality are larger, and return a higher percentage of crystals and brilliants than any other point in the system.

The basalt having covered the drifts and gravels containing the diamonds must of a necessity be of more recent date, and has in all probability also covered up the pipes which brought the gems to the surface.

The belt of carboniferous mudstone appears to extend to the north-west, and it will probably be found that several of the mines a few miles north-west of Daisey's will prove to be on tributaries of the Gwydir, and to have derived their gems from the same line of contact which they apparently cross to the north-east.

---

## Appendix.

Annexed is a sketch plan which may perhaps more fully explain the foregoing notes. As having had an opportunity of paying the fields another visit since, the writer appends a few more remarks thereon.

The old lead or river bed now covered by basalt, except where denuded, which contains the diamondiferous wash is marked by two red lines, the main branch being a portion of Cope's Creek, which does not contain diamonds until reaching the extinct volcano marked +, this being immediately west of the belt of carboniferous mudstone; the old river swept round the western base of this point of eruption, in fact, from a close examination of it, the writer is satisfied that the western wall of the crater has been worn away by the action of the river, and a result exactly similar to that so ably described by Dr. Atherstone in his paper on "Kimberley and its Diamonds," may have taken place, viz.:—"The water, especially at flood time, passing up and down the throat of the volcano during periods of activity would prevent such a degree of heat as would at other times consume the diamonds, and during intermittent periods of activity a considerable quantity of diamonds formed during intervals of repose would be forced up;" in this instance they would pass into the stream and intermingle with the gravels until the basalt made its appearance, which finally covered everything.

If not emitted from the volcanic neck itself, then thermal springs in the vicinity of the volcano are probably the source from which the diamonds came to the surface.

Digitized by Google

Digitized by Google

Digitized by Google

Daisey's Mine, now being worked under the superintendence of Mr. Barrington Brown, being immediately west of the point of eruption, it is only reasonable to suppose that the diamonds would be found in greater profusion there than farther down the stream, and this is exactly what is found to be the case.

The crater itself is on private land (a conditional purchase, 80 acres in extent, known as "Bingonaway").

By referring to sketch plan, it will be noticed that to the north-west the mudstone is covered by basalt (marked B), but there is little doubt the diamonds found at Staggy Creek (see plan) have been derived in a similar manner from some point of eruption on the line of contact of granite and mudstone, but which point is now perhaps hidden from view by the basalt. The same remarks also apply to Collas Hill to the south-west (see plan). The writer, however, has not been able to devote the time required to thoroughly prospect these points, but feels confident that success will reward those who undertake a systematic search, and that New South Wales will yet be a formidable rival to South Africa and her diamond craters.

Digitized by Google

## "On the use of Fuel at Caylloma, Peru."

By Bernard Hunt, Assoc. Inst. M.M.

The silver mines of the district of Caylloma, near Arquipa, Peru, have in the past been largely dependent on pumping operations for the extraction of their ores, and may again have to sink below water line, owing to the shallowness of the valleys and in order to get below the old workings of former Spanish owners. The Caylloma Silver Mining Company, Limited, must also command large supplies of fuel for the chlorodising roasting of the poorer ores for subsequent treatment by pan amalgamation.

Owing to the want of suitable timber, the great distance from railway communication, and the high rate of freights, every effort has to be made to obtain material near at hand which may serve as fuel. It is found, however, that local supplies are not equal to the demand made on them, nor are certain kinds suitable for raising steam, though they very well serve for roasting, so that the balance has to be made up with coal bought of the Railway Company, and carried from the nearest station, a distance of 100 miles, to the mines.

At the mines fuel is used only for raising steam for pumping, hauling, and for the occasional running of other small engines. When water had to be raised at the rate of 15,000 gallons per hour, 90 lb. to 100 lb. of steam were maintained on a 100 H.P. tubular boiler of the Babcock and Wilcox type, assisted by a Cornish boiler keeping 60 lb. to 70 lb. pressure. The consumption of coal then amounted to about 200 tons per month, or its equivalent in turf or yareta, the only local substitutes found to be sufficiently economical and capable of maintaining the desired heat.

From repeated trials of these fuels, they are found to compare as follows :—

Coal to yareta as 1 to 3.
,, turf as 1 to 5.

In the absence of pumping operations, when work was only

Digitized by Google

more or less of an intermittent nature, the consumption of turf dropped to just double that of coal, owing to the fact that the former is an excellent fuel for merely holding a fire.

Very little yareta is seen at the mines, the contractors preferring to deliver at the mill works on account of the better condition of the roads thither.

*Coal* (Australian) costs delivered at the railway station £3 per ton. The transport thence to the mines is as much as possible done by llamas, but the number obtainable of these animals being nothing like adequate, the greater part has to be carried by mules.

Llamas carry at 1·20*s.* per load of 100 lb., or £2 5*s.* per ton, whereas mules carry at 6·50*s.* per load of 300 lb., or £4 10*s.* per ton. Striking an average from these freight charges, and allowing for loss in dust and handling, it has generally been taken that coal costs delivered at the mines £7 5*s.* per ton.

*Turf* was cut and dried by contract during 1897 for 0·55*s.* per quintal of 100 lb., and carried in by the Company's own mules, so that it actually cost delivered in the mines 0·60*s.* per quintal, or £1 5*s.* per ton.

From this it will be seen that the same work can be done for £6 5*s.* with turf as for £7 5*s.* with coal.

At the Amalgamation Works the principal fuels burnt are yareta, taquia (llama dung), and petroleum shale. Turf is now only used for raising steam for the amalgamation pans and for heating up the furnaces previous to charging them, though it has occasionally been mixed with the other fuels for actual roasting.

With the exception of petroleum shale, all these fuels result much cheaper than coal, comparing as follows:—

Coal to yareta as 1 to 3.
„ turf as 1 to 5.
„ shale as 1 to 3.
„ taquia as 1 to 3·2.

Delivered in the mill, the prices result—

Coal, £7 5*s.* per ton.

| | | | |
|---|---|---|---|
| Yareta, | at 0·70*s.* per quintal, | £1 15*s.* | per ton. |
| Turf, | at 0·45*s.* „ | £1 0*s.* | „ |
| Shale, | at 2·00*s.* „ | £4 10*s.* | „ |
| Taquia, | at 0·30*s.* „ | £0 13*s.* | „ |

making the cost of roasting a ton of ore—

Digitized by Google

| | £ | s. | d. |
|---|---|---|---|
| With coal..... | 0 | 16 | 0 |
| „ yareta..... | 0 | 11 | 6 |
| „ turf..... | 0 | 11 | 2 |
| „ shale ..... | 1 | 9 | 0 |
| „ taquia..... | 0 | 4 | 6 |

Yareta, turf, and taquia can only be brought in during the dry months, May to November inclusive; sufficient must be stocked, therefore, during those months to meet the requirements of the other five months, which make up the wet season.

*Yareta* (*Bolax glebaria*) is a highly resinous plant, firm and compact, found distributed over the tops and sides of the mountains, cropping out from under the boulders, and spreading into large mounds often as much as 20 ft. across.

Cutting commences as soon as the rains begin to hold up. The work is very cheap, as the mounds are simply broken up with chisel-headed bars, and the pieces left for three or four months to dry on the spot. Yareta being of very slow growth, gets scarcer every year, already having to be brought considerable distances. It is probable that in a few years time there will be little or none obtainable except at such prices as will make it more economical to burn coal.

*Petroleum Shale.*—At a distance from Caylloma of 18 miles, and at an altitude of 18,000 ft. above sea level, there exists a series of beds of shale, more or less saturated with petroleum. The best of these beds are quite unworkable economically, on account of the dip and strike, which render necessary heavy pumping operations. One bed only was worked by the Company, but has recently been abandoned as unpayable. In this particular mine there are three bands of shale, varying from $\frac{1}{2}$ in. to 1 in. thick each, and some 2 ft. apart. Having 25 per cent. of volatile matter, a sufficiently good flame is obtained to make it a fair fuel for roasting.

The mine was worked on contract at 20*s.* per metre for tunneling, and 0·80*s.* per quintal for the shale produced. Only two drifts could be run dry, and these very close together, so that the ground opened up only gave about $1\frac{1}{2}$ tons of shale per linear metre. Thus it cost to produce alone £3 5*s.* per ton. With freight and sundries added, it cost to deliver in the mill £4 10*s.* per ton. Some of the other beds of the series have bands of from 3 in. to 6 in. in thickness, and give from 27 to 30 per cent. of volatile matter. Being, moreover, some miles nearer the works, they would have proved of immense value to the Company except for the objection above noted.

Digitized by Google

*Turf*, which is cut from the marsh grounds, is the more or less decomposed root matter of a species of stiff moss. When much interstratified with sand and mud it is not suitable for fuel. When clean, a large bed may have a depth of from 10 to 15 ft. of good turf, and is then very economical to work.

Cutting is commenced by removing the upper soil in patches of about 25 ft. square. It is better to expose only small surfaces, so that the frost* may more easily be kept off by covering at night with loose sods what is in process of being cut, otherwise it is almost impossible the following morning to get a spade through the frozen surface.

The upper soil removed, the turf is cut in terraces about 8 in. deep with spades, so that the sods measure each about 8″ × 4″ × 1″. These are carried away as cut and laid out on the pampa. When thoroughly dry the turf is sacked and conveyed to the mines, where it is stacked and covered up to protect from snow during the wet season. Turf needs about a month to dry thoroughly, for though the sun is powerful by day and the winds strong and dry, the sods get so frost-bound that it is only with difficulty the moisture can be driven off.

Dry turf weighs about 7½ lb. per cub. ft., and is in appearance like coarse-cut tobacco.

*Taquia* is collected by Indians from the corrals and pastures on their own *estancias*. The llama family drops its excrement in regular rows down the hill sides or on big heaps, so that the work of collecting it is but a trifle. When dry it is brought in, and the vendors receive 0·25*s*. per quintal, an additional 0·05*s*. per quintal bonus going to the contractor, who undertakes to travel about the country and induce the Indians to bring the fuel in. In this way taquia is obtained from great distances, and the quantity increases year by year.

* The thermometer during the months June to August registers on the average 22° of frost during the night, often in July going as low as 5° F.

Digitized by Google

# NINTH ORDINARY MEETING, 22nd June, 1898.

Mr. WALTER McDERMOTT (*President*) in the Chair.

---

The Minutes of the previous meeting having been read and confirmed,

The following paper was read :—

## "The Treatment of Broken Hill Sulphide Ores by Wet Extraction Processes, and the Electrolytic Deposition of Zinc."

By EDGAR A. ASHCROFT, M.Inst.M.M.

### *Introduction.*

THIS paper will be found to contain an account of some novel and extensive metallurgical work carried out in Australia, which, in spite of present commercial failure, will not be without interest to the metallurgical world.

The scope of the paper is confined to wet extraction processes, as the author has long thought that in this direction the permanent solution of the sulphide ore problem would be found, and nearly all his work has therefore been in that direction, but it is of course well known that a large amount of promising work has been done with various dry or direct smelting processes. The latter methods for the most part aim at the production of a zinc product suitable for reduction to metallic form by the ordinary retorting process, or, in some cases, notably in the case of the Bartlett process, in America, a standard form of zinc-lead pigment is produced and a market is found, to some considerable extent, for this product, whilst the silver and some of the lead are recovered as metals.

Though doubtless most useful in its own sphere, the latter method does not appeal to the author as being a permanent solution of the great sulphide ore problem, a satisfactory solution of which must be prepared to deal with and find markets for the products of many millions of tons of ore.

Some other dry processes which have been suggested (notably a recent one by Mr. J. Swinburne), but which are all more or less in

Digitized by Google

an embryo state, display much ingenuity and some promise of future utility, but are beyond the scope of this paper.

Before proceeding to describe the wet extraction process, a brief description of the Broken Hill sulphide ore deposits and the present methods of dealing with them by concentration is necessary.

These deposits constitute some of the largest and most uniform bodies of zinc-lead-silver-sulphides hitherto discovered in the whole world. It was for a long time, in fact until quite recently, supposed that these large deposits were of a much richer grade than has actually proved to be the case since the ores have begun to be worked in large quantities. No proper systematic sampling of the mines has ever, to the author's knowledge, been made public, but the general opinion amongst competent authorities at the time of the formation of the Sulphide Corporation three years ago is shown by the reports submitted to that Company by various high authorities. In one report the grade of some 4,000,000 tons of the ore is stated at 30 oz. silver, 30 per cent. lead, 30 per cent. zinc, and another gives the general average of the Central Mine reserves as 25 oz. silver, 28 per cent. lead, and 25 per cent. zinc.

The Sulphide Corporation Works at Cockle Creek were erected with the intention of treating slimes from the concentrating mill, which were expected to contain 45 oz. silver, 30 per cent. lead, 30 per cent. zinc, which was the actual grade of the slimes produced by the Block 10 Mill, and purchased for the author's original trials at Broken Hill. In vivid contrast to these figures, one has only to read the latest reports from the various mines, including the manager's report on the Central Mine issued to the shareholders of the Sulphide Corporation at the close of last year in which the true value of the ore, after proper sampling, was stated to be 11·9 oz. silver, 20 per cent. lead, 25·86 per cent. zinc. The 150,000 tons of the best ore which had at that date been extracted for the concentrating mill contained only slightly more metal. The slimes actually received at the Cockle Creek Works contained 16·5 oz. silver, 24 per cent. lead, and 26 per cent. zinc. but by alterations in the concentration machinery this grade was further reduced, before the works were closed down, to about 12 oz. silver, 20 per cent. lead, and 25 per cent. zinc.

Needless to say this falling off in metal values of the ore is a most serious handicap to any process whether it be a concentration or a wet chemical process, but it is most especially unfortunate for those processes which, unlike crude concentration, aim at recover-

Digitized by Google

ing all the metals from the ore, for whilst in the case of the complete recovery of metals the profits from a rich grade of ore would be very much greater than in the other case, it is also true that in complete recovery processes the point at which no profit at all can be made may be reached sooner. A comparison of costs and production, as given in this paper, will make this clear and the reason of it.

While, however, every one must feel that a serious error was committed in not ascertaining with some reasonable degree of accuracy the value of the ore available before erecting the Sulphide Corporation's large works, it is useless to repine at the quality of the ore which nature has provided, and the problem now to be faced at Broken Hill is the profitable treatment of at least some 10,000,000 tons of ore contained in the workings of some of the principal mining companies, which comprise some 15 40-acre blocks. This ore will probably not be found to contain an all-round average of above 10 oz. silver, 20 per cent. lead, and 25 per cent. zinc, and in the present state of public knowledge of the matter one must even be prepared for the possibility of this estimate proving too high for the general average of the ore on the field.

That an enormous quantity of this grade of ore exists is undoubted, and the author, speaking from some knowledge of the field, does not think that any further great falling off in the value will be experienced. Most of the sulphide bodies opened up hitherto have exposed rich casings of high grade and often friable ore, and it is probably from this cause that the excessive estimates of their metal contents arose. A ton of ore of the grade of 12 oz. silver, 20 per cent. lead, and 25 per cent. zinc contains a gross metal value of £8 2*s*. 6*d*., the value of metals being calculated at silver 2*s*. 3*d*. per oz. fine, lead £12 per ton refined, zinc £17 10*s*. per ton. At the present time only the narrowest margin of a few shillings a ton profit is being realised by concentration methods on this grade of ore, and the author does not know of any grade of ore being worked in any quantity on the field from which a larger profit than 15*s*. can be realised at present; and for this result an assay value of something like 22 oz. silver, 20 per cent. lead, and 25 per cent. zinc is required, meaning a gross metal value in the ore treated of over £9 per ton. In spite of this disappointment the existence of such large bodies of ore of such a considerable metal value, and the absence of a really satisfactory method of treating the ore, constitutes, in the author's opinion, an attractive and most important problem for the metallurgist, the inventor, and the financier.

Digitized by Google

The general difficulties which lie in the way of the successful treatment of these ores are concisely indicated in the following quotation from the writings of Dr. Schnabel, Royal Commissioner to the Prussian Mining Department, who has studied this problem a great deal :—

> *January*, 1895.—"To treat intimate mixtures of zinc blende and galena carrying silver has always been one of the most troublesome problems of metallurgy. The difficulties are due to the mutual interference of the lead and zinc contents of the ores if they are treated either by the ordinary methods of lead recovery or the ordinary methods of zinc recovery. It is not possible to effect the complete separation of the lead and the silver from the zinc of the ores by mechanical dressing, because a considerable part of the silver contents is found to remain with the zinc product, and cannot be profitably recovered therefrom. A part of the lead also remains with the zinc product, and other products are formed which carry zinc, lead, and silver in varying proportions, and therefore are not amenable to the ordinary methods of treatment. To treat the mixtures of zincblende and galena by roasting and smelting will always be productive of large losses of silver and lead, and the zinc cannot be economically recovered in any furnace products which would be marketable. This treatment would also require large expenditure for fluxes and fuels. Many other attempts have been made to treat the ores profitably in the dry way. As most of these methods have been reviewed by me in my report to the Barrier Ranges Mining Association, dated March 15th, 1892, it will be sufficient to say here that none of the proposals made up to that date offer much prospect of profitable application, and nothing practicable has been made public since in this direction to give hopes of a solution of the problem which would-be advantageous. The only method which offers any prospect of profitable application to these ores, consists in extracting the zinc from the roasted ores by solvents, smelting the residue which contains the lead and silver, whereby bullion is produced, and recovering the zinc from the solutions. The problem hitherto unsettled in regard to this method of treatment was the providing the most suitable solvent, and of economical means to obtain this zinc in a marketable form from the solution."

To these remarks the author would add that the presence of garnets and rhodenite in the poorer grade ores is the principal reason why, so far, it has proved impossible to make any marketable zinc product from the ores by concentration. The specific gravity of these minerals is too near to that of the zinc blende they are mixed with to permit of separation by gravitation, and therefore only a low grade zinc-silver product is produced, which has no market value. The only valuable product obtained by concentration has, therefore, hitherto been a concentrate of silver-bearing galena, in which about 70 per cent. of the lead, and 50 per cent. of the silver, contents of the ore are obtained. These con-

Digitized by Google

centrates also are contaminated with about 10 per cent. of zinc, which is a hindrance in the smelting.

For these reasons, and also because of higher railway freights, and less favourable labour conditions than now exist, the sulphide ores were, until a few years ago, regarded as quite valueless, in spite of their supposed richness, and only those mines which had reserves of oxidised ores still unexhausted were of any market value. In 1895 some successful preliminary concentrating work done by the South, the Block 14, and the Block 10 Companies, coming simultaneously with the announcement of the successful trials of the Ashcroft Process, the formation of the Sulphide Corporation to work the Central Mine, and the formation of some other companies having similar objects, caused a remarkable access of public interest in the sulphide ores.

The shares of the mining companies rose considerably. The Block 10 Company, owning one of the very best mines, which has always been well managed, experienced the sharpest revival, and the experience of this company, being typical of that of the whole field, is interesting to note. There are only 100,000 shares in this company, and so small was all interest in the silver mines of Broken Hill becoming, as the depletion of the oxidised ores caused cessation of dividends for a time, that its shares had actually fallen to 5*s*. before the revival took place. In a very short time afterwards they rose to £5, and in spite of the crude methods of treating the ore which are in use, the narrow margin of profit obtained is still sufficient to pay good dividends on the small capital of the company.

During the last three years all the principal companies have been erecting and working concentrating mills for their ores. Those companies owning the better quality of ore have made satisfactory returns and paid dividends, those having the poorer ores only have struggled along with a bare subsistence, and no dividends.

The pioneers of the concentration on the field were Mr. Hancock of Moonta, Mr. T. J. Greenway of Block 14, Mr. J. Warren of Block 10, and others.

The principal mills erected at date are :—

| | | | | | | |
|---|---|---|---|---|---|---|
| Proprietary Co.'s | .. | .. | capacity | 5,000 | tons | per week. |
| British | .. | .. | „ | 3,000 | „ | „ |
| Block 10 | .. | .. | „ | 2,500 | „ | „ |
| Central | .. | .. | „ | 4,500 | „ | „ |
| Block 14 | .. | .. | „ | 2,500 | „ | „ |

besides the smaller mills of the South, Junction, North, Junction

Digitized by Google

North, and others, making probably a total aggregate treatment of 20,000 tons of ore per week at date.

At the time of writing, though many trial shipments have been made to European works, and many experiments tried on the field, the author believes he is correct in saying that not a shilling has yet been earned from any of the zinc products, and these products are now accumulating on the mines at the rate of, approximately, 15,000 tons per week.*

The cost of mining and concentrating, including a fairly large charge which it is found necessary to make for systematic development work underground, is stated at, approximately, 15*s.* per ton of ore, and there is no immediate prospect of this item being much reduced.

From one ton of ore carrying 12 oz. silver, 20 per cent. lead, and 25 per cent. zinc, we will assume that 20 per cent. of concentrates can be produced, carrying 50 per cent. of the total silver, and 70 per cent. of the total lead. The assay value of the concentrates will then be 30 oz. silver, 70 per cent. lead, and probably 10 per cent. zinc, and the concentration 5 into 1.

This product will be worth as follows :—

| | £ | *s.* | *d.* | £ | *s.* | *d.* |
|---|---|---|---|---|---|---|
| 30 oz. silver at 2*s.* 3*d.* — 5 per cent. .. .. | 3 | 4 | 1 | | | |
| 70 per cent. lead at £12 — 20 per cent... .. | 6 | 14 | 5 | | | |
| | | | | 9 | 18 | 6 |

It will cost to produce as follows :—

| | | | | | | |
|---|---|---|---|---|---|---|
| Mining and concentrating 5 tons at 15*s.*... .. | 3 | 15 | 0 | | | |
| Carriage to Newcastle open .. .. .. | 1 | 2 | 6 | | | |
| Roasting and smelting costs at Newcastle .. | 1 | 10 | 0 | | | |
| Refining charges on bullion, 15 per cent. of £10 | 1 | 10 | 0 | | | |
| Loading and unloading .. .. .. .. | 0 | 2 | 6 | | | |
| | | | | 8 | 0 | 0 |
| Balance of profit .. .. | | | | £1 | 18 | 6 |

If the concentrates are sold to the European smelters an inclusive returning charge is made of about £3 15*s.* per ton, covering losses of metals and refining.

On this arrangement the account would be approximately as follows :—

* Since writing the above, a sale of a small parcel of zinc products is reported by the Directors of the S.C.A.P.

Digitized by Google

| | £ | s. | d. | £ | s. | d. |
|---|---|---|---|---|---|---|
| *Paid on* 30 oz. silver at 2*s.* 3*d.* .. .. .. | 3 | 7 | 6 | | | |
| 70 per cent. lead at £12 .. .. | 8 | 8 | 0 | | | |
| | | | | 11 | 15 | 6 |
| *Costs.*—Mining and concentrating 5 tons at 15*s.* | 3 | 15 | 0 | | | |
| Freight to seaboard .. .. .. | 0 | 13 | 6 | | | |
| Loading and unloading .. .. .. | 0 | 2 | 6 | | | |
| Freight by steamer to Europe (say) .. | 1 | 0 | 0 | | | |
| Landing, agency, &c., charges, Europe.. | 0 | 5 | 0 | | | |
| Smelters' returning charge .. .. | 3 | 15 | 0 | | | |
| | | | | 9 | 11 | 0 |
| Balance of profit .. .. | | | | £2 | 4 | 6 |

It would appear that a slight advantage exists in favour of the latter method of dealing with the concentrates, especially as at Newcastle £1 10*s.* per ton for roasting and smelting costs has not yet been realised in practice, but it is probable that the companies will prefer to handle their own products, even at a small temporary disadvantage, provided no real or considerable difference in the returns obtainable exists. These matters can, of course, only be decided by the management, in full knowledge of all the conditions of markets, &c., from time to time.

The above sketch of the concentration process shows that, approximately, 8*s.* per ton is all that can be netted out of a metal value of over £8, and the author believes that the above figures represent at least as good work as has yet been done on the low grade ore.

To state these results briefly—

The £40 12*s.* 6*d.* metal values contained in the five tons of ore from which the 1 ton of concentrates is produced, is treated as follows:—

| | £ | s. | d. |
|---|---|---|---|
| Thrown away in at present useless bye-products .. | 27 | 3 | 0 |
| Lost in smelting the balance .. .. .. .. | 3 | 11 | 0 |
| Expended in costs .. .. .. .. .. | 8 | 0 | 0 |
| Realised for profit .. .. .. .. .. | 1 | 18 | 6 |
| | £40 | 12 | 6 |

This is truly a remarkable recovery process, but such as it is, it must not be despised until we have something better. It, moreover, possesses the undoubted advantage that the bye-products are not lost, but merely stored, and will be available to take advantage of any developments which the future may have in store.

It is not proposed to give here any description of the concentrating machinery employed. A good deal has already been written on this subject, which is now one of general knowledge.

Digitized by Google

What, however, the author has long felt, and what he thinks will be abundantly evident from the above sketch, is that the Broken Hill ore deposits demand, and may reasonably hope for, a more perfect method of treatment than is at present applied. It was with the view of supplying this demand that the author, some five years ago, and at a time when the ores were not worked at all, addressed himself to the problem of the zinc recovery.

The outcome of two years experimenting in various directions was the invention of the Ashcroft Electrolytic Process, a process which has obtained notoriety, both from the brilliant success of the trials of the process made at Broken Hill, and afterwards at the large works erected at Grays, Essex, in 1895–96, and of the subsequent failure of the Sulphide Corporation (Ashcroft's Process) Limited, to profitably work the process, now that works have been erected at Cockle Creek, N.S.W., on a very much larger scale. On these latter works a sum of £250,000 has been expended from start to finish, and this large expenditure has, so far, produced no return. The main reason of this truly lamentable result is not far to seek, as it has already been stated that these works were erected to treat slimes containing 45 oz. of silver, 30 per cent. lead, and 30 per cent. zinc, and were actually supplied with slimes and seconds containing 16·5 oz. silver, 24 per cent. lead, and 25 per cent. zinc, a gross difference in value of £4 15*s.* per ton of ore; and, furthermore, even this grade could not be maintained. This difference of value in the material supplied is sufficient of itself to account for the absence of the profit of from £2 to £5 per ton promised from the treatment of the products of the Central Mine and mill at these works, but there have been other causes connected with the organization of the business which have hampered the completion of the works, and retarded the development of the processes for which the works were erected. These latter are outside the scope of this paper.

If this were not so, and if the old figures of costs and recoveries were the best that could be accomplished, there would be nothing for it in the absence of richer ore but to give all such processes a decent burial, but as it is, and after much practical and really convincing experience, the author is of opinion that the ores can to-day, even with their reduced metal contents, be treated by the processes with which this paper deals, when once the expensive works are completed, to greater advantage than by concentration or any other method yet known to him. Moreover, in the very nature of the wet extraction processes, which involve many operations, there lies a probability amounting to a certainty



Digitized by Google

that substantial improvement will be made in results by reduction of costs of working as time goes on. When the margin between costs and production is narrow and the total expenditure per ton is considerable, as is the case with these low grade ores worked by the wet extraction process, a comparatively small percentage of reduction in costs greatly increases the proportion of profit. No such possibility lies in the concentration methods, unless the zinc products could be made marketable, because, the margin being narrow between cost and production, the total sum of the production is small also.

As far as the author knows, the works at Cockle Creek, N.S.W., are the only works which have so far been erected on a large scale for the recovery of zinc from this class of ore, and it is thought that whatever the outcome of the present venture may finally be to the shareholders, the experience gained cannot fail to be of interest to the members of this Institution.

## Part I.—The Treatment of the Ore by Wet Extraction.

The fundamental operations of this treatment are conveniently classed as follows:—

*The Ore.*

1. Drying the raw ore.
2. Crushing „ „
3. Roasting „ „
4. Re-grinding the roasted ore.
5. Leaching the roasted ore.
6. Separating the zinc solution from the residues.
7. Drying and briquetting the residues.
8. Smelting the residues.
9. Refining and parting the silver-lead bullion.

*The Solution of Zinc Salts.*

10. Precipitating and recovering copper, if present.
11. Purifying and rectifying solution for electrolysis.
12. Electrolytic deposition of zinc from solution with simultaneous regeneration of acid. Including melting up deposits and casting of ingots.
13. Evaporating wash-water or equivalent from solutions for cyclic work and heating solution for leaching and filter-pressing.

Digitized by Google

*Or Alternatively.*

14. Evaporating solution for zinc sulphate.
15. Mixing to paste.
16. Drying and furnacing paste.
17. Finishing off oxide in open furnaces.
18. Making sulphuric acid from furnace gases.
19. Retorting zinc oxide to metal.
20. Supplying any deficiencies of acid gases occurring in cyclic working.

All these operations are brought into use in the complete treatment of the ore, which is unavoidably a very complicated matter, but, by the methods described, the entire contents of the ore are recovered in metal form, less the usual smelting losses of lead and silver, and a gross loss of about 20 per cent. of the zinc.

As a very great deal of nonsense has been written in books and patent specifications about many of these operations, the author will endeavour to give all the results of actual experience as fully as possible, and to distinguish clearly from the rest some of the operations for which as yet definite costs, consumption, production and losses, have not been determined on a large scale outside the laboratory. With these few exceptions, which are distinguished clearly from the rest, the figures of costs given below are in every case actual certified cost sheets, covering the latest operations, which extended over about 3,000 tons of ore put through at a recent trial under the author's own direct supervision, but as in several cases working was carried on under palpable disadvantages of a purely temporary nature, and as this particular trial was interrupted for commercial reasons before it was completed, the author has supplemented such figures as he knows can be altered by lower ones based on careful deductions from the actual results, and has adopted this figure in compiling the cost sheets which comprise Part IV of this paper. In all cases such deductions are pointed out in the text.

No. 1. *Drying the Ore.*—This is done in shelf kiln dryers of usual design, and the cost is, approximately, 6*d.* per ton of ore.

No. 2. *Crushing the Ore.*—Generally it may be stated that these ores can only be advantageously roasted in a very fine state of division. When not using slimes, the author has obtained good results with ore crushed to 60-mesh. The crushing is certainly done best in Krupp Ball Mills, which answer admirably for the purpose. If the ore is at all damp, it is essential to use the dryer before crushing, and the best possible results from the



Digitized by Google

mill are obtained when the material is quite dry and warm. The output of one No. 5 Ball Mill was 30 tons per day of 24 hours on fairly hard ore. The mills should be automatically fed, not only to save expense of feeders, but to ensure maximum output, which greatly depends on regular feeding.

The cost of crushing was:—

| | s. | d. |
|---|---|---|
| *Labour.*—Engine driving .. .. .. .. | 0 | 6·9 |
| Feeding (hand) .. .. .. .. | 0 | 3·2 |
| *Stores.*—Sundries .. .. .. .. .. | 0 | 1·1 |
| *Other Accounts.*—Maintenance .. .. .. | 0 | 0·4 |
| Proportion of boilers .. .. .. .. | 0 | 3·6 |
| Total .. .. | 1 | 8·2 |

This result was obtained when using only one hand-fed mill. For a plant comprising five mills driven from one engine and automatically fed (a plant suitable for dealing with 1,000 tons of raw ore per week), it will be absolutely safe to state the cost at 1*s.* per ton.

Contrary to expectations, the author found the wear and tear of the mill inconsiderable, and altogether the dry crushing of the ore was a cheap and simple matter.

No. 3. *Roasting the Ore.*—Ten furnaces in all, set into a common flue and stack, were employed at Cockle Creek for this work. The type of furnace was a hand rabbled reverberatory, having a hearth 60 ft. long and 12 ft. wide. Each hearth had six steps for convenience of systematic rabbling down, and included a hollow hearth underneath the fire bridge, which was found convenient for raking out the charge through a central door into trucks in a tunnel beneath.

The object aimed at in this roast is not to drive off sulphur, as is usually the case in roasting ores, but to oxidise the sulphur and retain as much as possible in the ore while leaving as little unoxidised ZnS as possible. This necessitates a very low heat and much time. The roasting ore is scarcely visibly red in the daylight. The ore contains from 15 per cent. to 20 per cent. of sulphur, according to its quality, and if the ore is finely divided and the furnace regularly worked an even combustion is maintained throughout the entire length of the furnace, and the roasting is accomplished successfully without overheating. The two hearths nearest to the fire bridge are preferably covered by a curtain arch, which serves to equalise the heating effect throughout the length of the furnace. A charge of about 2,500 kilos. of ore is introduced through a hopper on to the top hearth at intervals of

Digitized by Google

six hours, eight hours, or twelve hours, according to the quality of roast required. Before introducing a new charge, all the old charges on the hearth are rabbled down one step and the last hearth is discharged. When charging and discharging the furnaces every six hours, 10 tons are roasted per furnace per 24 hours. This output is only possible (if the ore is to be perfectly roasted) when the material is exceedingly fine (from 100 to 200-mesh), as in the case of some slimes. When charging and discharging every 12 hours the output per furnace will be 5 tons, and the ore will remain in the furnace 72 hours.

The long roast is essential (for any material coarser than impalpable slimes) when the extraction of the zinc is to be carried out to a high degree of completion, such as when it is desired to remove, say, 22 units of zinc out of 25, leaving residues assaying some 5 per cent. of zinc on their reduced weight. Although the furnace plant required for a given output is much greater for the slow roast, it is not much more costly in working than the quicker roast, as one man is made to work one furnace on a 5-ton output, and it requires two men for one furnace on the 10-ton output. The furnace men charge and discharge their own furnaces and attend to the fires, which must be kept very steady and not fierce. For a line of 10 furnaces two charge wheelers per shift bring the ore to the furnaces and two truckers take it away to the regrinding mill storage bins. For the six-hour charges (10-ton output) an extra charge wheeler and an extra trucker are required. The coal used for the quick roast is approximately 15 per cent., and for the slow roast 25 per cent. of small coal, costing on the works 4*s.* per ton.

The cost of roasting came out as follows, over 2,729·4 tons at the average rate of 5·8 tons per furnace per 24 hours, and including a good deal of experimental work and a short strike amongst the roasters :—

| | *s.* | *d.* |
|---|---|---|
| *Labour.*—Rabbling .. .. .. .. .. | 5 | 0·6 |
| Trucking coal .. .. .. .. .. | 0 | 2·4 |
| Shift bosses .. .. .. .. .. | 0 | 7·0 |
| Sampling .. .. .. .. .. | 0 | 0·8 |
| *Stores.*—Coal .. .. .. .. .. | 1 | 1·08 |
| Sundries .. .. .. .. .. | 0 | 0·1 |
| *Other Accounts.*—Maintenance .. .. .. | 0 | 1·8 |
| Total of roasting .. | 7 | 1·78 |
| Opening bags and carrying to furnaces .. | 1 | 0·3 |
| Trucking away from furnaces to bins .. | 0 | 11·4 |
| Grand total .. .. | 9 | 1·48 |

Digitized by Google

The cost when working the furnaces on the 10-ton output came down to 5*s.* 6*d.* per ton for roasting and 1*s.* 6*d.* for carrying, making a total of 7*s.*

The following is the general average assay of the roasted ore compared with original assay and weights:—

*Table showing approximate Results of Roasting.*

| Ore treated. | Tons treated. | Average assay. | | | Zn insol. in $H_2SO_4$. | Zn sol. in $H_2O$. | $H_2SO_4$. | S. | Contents by assay. | | | Loss per cent. | | |
|---|---|---|---|---|---|---|---|---|---|---|---|---|---|---|
| | | Ag. | Pb. | Zn. | | | | | Ag. | Pb. | Zn. | Ag. | Pb. | Zn. |
| | | oz. | p. c. | p. c. | | | | | oz. | tons. | tons. | | | |
| Charged ... | 2729·4 | 16·59 | 25·1 | 27·9 | 27·9 | — | — | 19·4 | 45,282 | 684·87 | 763·37 | *1·8 gain | | |
| Discharged | 2659·08 | 17·3 | 24·5 | 28·4 | 3·2 | 1·0 | 8·5 | 6·5 | 46,116 | 654·09 | 755·67 | — | 5 | 1 |

N.B.—The ore lost 2·6 per cent. of its weight in roasting.

It is certainly possible to do better work than this, especially in the matter of leaving more $SO_3$ in the roasted ore, for, as already stated, the above included some experimental roasting of coarser material. About 10 per cent. to 12 per cent. of $H_2SO_4$ can be reckoned on with finely crushed ore and a slow roast.

*Mechanical Furnaces.*—There seems to be no reasonable doubt that this special roast could be conducted to great advantage in mechanical furnaces, such as the Brown "horse-shoe" or the Ropp "straight-line" furnaces. The low temperature required, the continual stirring needed, and the entire absence of any tendency in the charge to ball or stick to the rabbles, all point to the fact that good work could be done in these furnaces without the usually somewhat heavy repair bill. The author was, unfortunately, not able to gain any actual experience on Broken Hill ores with these furnaces. Some Brown furnaces were purchased and landed on the ground for the work, but owing to causes over which the author had no control were not erected. There seems, however, good reason to state the cost of roasting at 3*s.* per ton, and the handling to and from at 1*s.* 6*d.*, making an entire roasting cost of 4*s.* 6*d.* per ton as against 9*s.* 1*d.* in the hand furnaces. The capital outlay for mechanical furnaces is a heavy item, being approximately double that for hand furnaces.

A few general remarks may be added about the roasting of these ores. A great deal of experimental analysis was done to determine the rate of roasting on the various hearths from the hottest to the coolest. The final conclusion arrived at was that

* Apparent gain of silver, due probably to variations of assays.

Digitized by Google

nothing will accelerate the process except fine division of the ore, and more continual rabbling than is convenient in a hand furnace. The finer the sieves used on the crushing mill and the freer the access of air to each particle, the easier, and quicker and cheaper is the roasting. It is essential that an almost uniform heat be maintained throughout the entire length of the furnace. The first hearth will of course be a little cool with the incoming cold charges, and the last or finishing hearth may be a few degrees hotter, but must be protected as already stated from the full blast of the fire by a curtain arch. The roasting is conducted at approximately 500° to 600° C., and an extremely sluggish draught is necessary. As little opening of the doors as possible should be allowed, otherwise great loss of heat results, and the charge at the far end becomes cooled. If the temperature be raised beyond about 600° C., much of the $SO_3$ formed is driven off, leaving ZnO and basic zinc sulphate, the expense of replacing this lost acid in the subsequent leaching is a considerable item. The ore also becomes sintered by high heat, and in that condition is difficult to leach for mechanical reasons.

It has not been found practicable to determine in what actual combination the $SO_3$ contained in the dry roasted ore is, but in any subsequent acid leaching the lead oxides always absorb nearly their equivalent for conversion into lead sulphates, so that for practical purposes acid must be provided from somewhere to convert both the lead and the zinc into sulphates, besides a considerable percentage of Mn and a little Fe. Therefore if a very considerable percentage of $SO_3$ is not formed in and retained by the ore in roasting, it will be found necessary for the subsequent leaching to supply a quantity of acid greatly in excess of that calculated to satisfy the zinc, and this acid must of course be supplied from some outside source. When leaching very hastily roasted ore, the loss of acid due to this cause may amount to 50 per cent. of that calculated to satisfy the zinc, but with extremely carefully roasted ore, very little, if any, will be required beyond what is formed in the furnace, plus the calculated equivalent for the zinc, and it is possible that under proper conditions and in regular work a small excess may be realized, which is very desirable to make good any losses occurring in the regenerative process.

It will be seen therefore, how largely economical considerations, such as the price of fresh acid, or the cost of regenerating it, will influence the precise nature of the roast to be adopted, and the extent of the furnace plant required for a given output.

Digitized by Google

No. 4. *Regrinding the Roasted Ore.*—After the ore has been roasted, it is decidedly preferable to again pass it through Krupp Mills, and this time they should be fitted with 100-mesh, or even finer screens. If this course is not adopted, the leaching cannot be carried out either so expeditiously, so effectively, or economically.

The No. 5 mill will put through 40 to 50 tons per 24 hours of roasted ore, as against about 30 tons of raw crushed to the same fineness.

The cost of regrinding will be about 25 per cent. lower than for the original crushing, because the output of each mill will be 50 per cent. greater, but as it is most desirable to use as fine screens as can be practicably worked, it will be better to use the same number of mills and fine screens, and the cost will then be approximately the same as for the original crushing, viz., 1*s.* per ton. The ore must not be allowed to get in the least damp before regrinding.

No. 5. *Leaching.*—Experimental work has been done with many different leaching solutions, amongst which may be mentioned various mixtures of chlorides and sulphates of zinc and alkalis with ferric chloride, ferric sulphate, hydrochloric and sulphuric acids, &c. For various reasons (especially the tendency of chlorides to dissolve silver, and the trouble of recovering it from the solutions in such considerable volumes, and the supposed tendency of residual chlorides in the residues to cause extra losses by volatilisation in the smelting department), the author has abandoned the use of chlorides. He has also abandoned the admixture of alkali salts such as sulphate of soda, alumina, &c., in favour of a simple strong solution of zinc sulphate, the leaching acid being free sulphuric acid with or without ferric sulphate. In such a solution the reactions of ferric sulphate, $Fe_2(SO_4)_3$, are for all practical purpose precisely the same as those of sulphuric acid. The $SO_3$ will, on being brought into contact with ZnO, discard the $Fe_2O_3$ with which it is associated in favour of the ZnO, forming $ZnSO_4$, and precipitating the hydrated oxide of iron $Fe_2(HO)_6$. The first essential in practice in dealing with these solutions and ores is to have a rapid and reasonably accurate method of determining their leaching powers and conditions, and calculating the requisite charges. The author does this very conveniently for either ferric sulphate or free sulphuric acid, or admixtures of both, by titrating acidimetrically with a caustic alkali standard solution, using congo red paper as an indicator, and expressing all results in grams of free $H_2SO_4$ per litre, without regard to the iron present.

Digitized by Google

A coefficient (K) is determined for the ore placed in the leaching works bins each day. This coefficient represents the percentage of its own weight of pure $H_2SO_4$, which a given sample of the ore will absorb or neutralise under conditions closely imitating as to time, temperature, &c., those of practical work in the agitators. The coefficient for the average ore is usually something above 30, but of course varies with the nature of the roasting and the contents of the ore.

This coefficient in reality represents an extremely complicated factor, dependent not only on the actual lead, zinc, iron, and manganese contents of the ore, but also upon the perfection of the decomposition of the galena and blende in roasting, and also inversely on the quantity of sulphuric acid contained in the ore after roasting. It is, however, determined by a simple operation, which can be rapidly and accurately performed, viz., by saturating a gram of the ore with standard acid, and titrating back with the standard alkali solution. After determining the constant of the ore and the acidity of the solution, the following equation gives the amount of ore to a given volume of solution :—

V = volume (litres).
W = weight of ore (grams).
K = coefficient of ore.
A = acidity of solution (gram $H_2SO_4$ per litre).

$$V \times A \times \frac{100}{K} = W.$$

For each value of K a table is calculated for rapid reference.

In the above manner all the working analyses necessary for the leaching department, which are in reality extremely complicated, are reduced to two simple volumetric titrations, one of which is done once on the day's sampling of the ore, and the other is done once for each agitator charge of solution. One junior chemist per shift of eight hours, receiving £2 10*s.* per week, does the whole of the working tests for all the departments for an output of 1,000 tons per week, including regular hourly determinations in the electrolytic departments.

The agitators used for leaching consist of wooden vats, five in number, 18 ft. in diameter and 6 ft. deep, provided with an agitating frame of timber with a cast-iron head piece and steel shaft hung from a girder frame above the vat. The frame is suspended by and runs in a ball-bearing, and is driven by crown wheels and belts from a main line shaft attached by direct coupling to a 100 H.P. engine. A foot step of gunmetal with lignum vitæ

Digitized by Google

liners steadies the bottom of the agitator shaft. A clearance of about 3 in. is allowed below the blades and at the sides. Vertical mould boards are fixed radially to the sides of the vat, and extending 1 ft. towards the centre. A 6-in. inlet valve (acid proof), an ore shoot from the weighbridge, a 6-in. acid proof full way discharge valve, and a 2-in. steam pipe and boiling jet complete the equipment of the vat.

The leaching vats are provided with volume gauges, and the ore bins with a 4 kilo-ton hopper weighbridge over each agitator, having gates in and out of the hopper so arranged that one man fills, weighs, and dumps into the leaching vat a charge of 3 or 4 kilo-tons with great ease in about five minutes. The same man runs in the solution, attends to the steam jets, and runs the charge out when finished. One man and boy per shift attend to five agitators, putting through 1,000 to 1,200 tons per week.

The agitator makes 12 to 15 revolutions per minute, and promotes very violent agitation without the slightest splashing. With finely ground ore each vat can carry 4-ton charges, and each charge can easily be started and worked off in two hours, so that an average output of 40 tons per day per vat can be maintained. The progress of the leaching is indicated by testing the liquor from time to time with the alkali solution for free acid, and the practice adopted is to discharge the vat as soon as the free acidity falls to 2 grams $H_2SO_4$ per litre, which, with properly proportioned charges and re-ground ore, takes place uniformly after about one hour's agitation. It is worthy of note that if the ore be not re-ground after roasting, and is in the least degree cintered or caked, the agitation necessary to effect the same leaching may last 10 hours, and the capacity of each agitator under these conditions would be only about 8 tons per day. Very carefully roasted and very fine slimes may be leached without re-grinding, but the extra care required in the roasting will probably be found to cost as much as the re-grinding, which is cheap. Hence the extreme importance of re-grinding the ore after roasting. The small quantity of acid remaining when the charge leaves the agitator does not detrimentally affect any of the apparatus, and is usually neutralised by slow action on the residual zinc and lead of the ore before the charge arrives at the filter presses.

The charge in the leaching agitator must be heated to approximately 80° C., both to ensure quick and uniform leaching, but more especially to prevent the deleterious action of gelatinous silica in the filter presses. This form of silica results from the decomposition of various silicates by the sulphuric acid, and is always disen-

Digitized by Google

gaged somewhat freely in leaching these ores with acids. If a solution has been used containing very much free acid, and the charge has subsequently been allowed to cool without filtering, the author has known the whole mass to set to the consistency of a strong jelly, and become quite unworkable. This jelly silica also forms in layers of pure hydrated silica (like native opal) on the filter cloths if the solutions are worked too cold. If the filter cloths are once allowed to get into this condition it is impossible to use them, as they are completely choked by even a very thin layer of silica. If, however, the solutions are filtered at 80° C., and if not more than 100 grams per litre of free acid are allowed in the leaching solution (which corresponds to approximately 4 tons ore to 15,000 litres of solution), the jelly silica will give no trouble, and remains with the residues in the press cakes.

On leaving the leaching agitators, a second vat, 18 ft. in diameter and 18 ft. deep, receives the whole of three charges. These vats are provided with a light agitator just sufficient to keep the charge in gentle motion and prevent settling whilst the pumps are passing the liquors through the filter presses. The large vats are five in number, so that each is filled and emptied once for every three charges worked in the corresponding leaching agitators. In the large vats the temperature is maintained at 80° by a supplementary jet of steam.

Before passing on to describe the separation of the residues from the zinc solutions, there are a few points about the leaching reactions worthy of note. It is specially desirable to dissolve nothing but zinc in this operation, as will be readily seen when we come to the consideration of cyclic regeneration processes for dealing with the zinc solutions. In practice, both manganese, iron, and aluminium are brought into solution, the former in fairly large quantities, often amounting to 1 gram of manganese for every 10 grams of zinc dissolved.

The author has observed that the solution of iron from the ore entirely ceases, and the solution of manganese becomes less, when the leaching solution is already rich in zinc. As this condition is a suitable one both for the cyclic electrolytic process and for the zinc oxide recovery process, both described below, all his later work was done with solutions containing a normal average of 100 grams and more per litre. The results with such solutions were excellent. The absence of evaporating plant for the wash-waters, which under these circumstances contain a high percentage of the total zinc, and the necessity of introducing live steam to boil the solution, prevented this condition being properly maintained, and

Digitized by Google

the solutions when working cyclically always gradually became more dilute, causing the solution of larger quantities of manganese and other difficulties. The self-evident remedy is to evaporate the wash-waters and heat the solutions by other means than by introducing live steam. The intention originally was to use the waste heat from a bank of five Hasenclever furnaces for this purpose. The furnaces were designed for the reduction of the discarded solution of zinc to zinc oxide by the oxide process. The waste heat is considerable, owing to the high temperature at which these furnaces are worked, and it would be sufficient to heat and partially concentrate the acid solution before leaching. In this way enough water would be evaporated daily from the working solution in a cyclic process to permit the addition of the whole of the wash-waters from the presses direct to the solution without lowering its strength. The Hasenclever furnaces and the accompanying lead chambers and towers for working up the acid gases to $H_2SO_4$ were purchased, but never erected, owing to causes over which the author had no control, and we were in consequence obliged to fall back on steam heating for the solutions, and on purchased acid, which had to be railed 100 miles, for the supply of deficiencies of the solution. The omission to erect these necessary works, on which £11,000 had already been expended when it was decided to stop them, was very much to be regretted. The reduction of capital outlay only amounted to £14,000, whilst a sum of about £7,000 was afterwards actually expended in purchasing and railing acid during the six months that the works were in experimental operation. Besides this, the supply of purchased acid obtainable was so small that only an output of 300 tons of ore per week could be made at the best. Many interruptions in the supply of acid occurred, causing further reduced output, while all the fixed expenses were necessarily just as great as if the full output of the works of about 1,000 tons per week had been going on. In this manner it is now certain that the attempt to economise the outlay of that £14,000 cost the company some £50,000, with no compensating advantage whatever.

*Costs.*—The costs of leaching came out as follows over a trial lot of 1,520 tons :—

Digitized by Google

| | s. | d. |
|---|---|---|
| *Labour.*—Foremen .. .. .. .. .. | 0 | 8·9 |
| Mechanics .. .. .. .. .. | 0 | 5·9 |
| Engine drivers and attendants .. .. | 1 | 0·9 |
| Agitator attendants .. .. .. .. | 0 | 4·5 |
| Junior chemists and boys .. .. .. | 0 | 11·2 |
| Sampling .. .. .. .. .. | 0 | 1·6 |
| *Stores.*—Sundries .. .. .. .. .. | 0 | 5·0 |
| *Other Accounts.*—Proportion of boilers .. .. | 1 | 0·0 |
| Maintenance .. .. .. .. .. | 1 | 0·3 |
| Total per ton.. .. | 6 | 2·3 |

The following is a table of the results of the leaching analysis:—

*Leaching Works.*

| Ore treated. | Original tons. | Average assay. | | | Contents by assay. | | |
|---|---|---|---|---|---|---|---|
| | | Ag. | Pb. | Zn. | Ag. | Pb. | Zn. |
| | | oz. | p. c. | p. c. | oz. | tons. | tons. |
| Roasted ore charged | 1520·8 | 16·5 | 24 | 26·8 | 25,113 | 366 | 409·011 |
| Residue sent out .. | 1517·0 | 16·3 | 24 | 7·89 | 24,730 | 365 | 121·0 |
| In plant .. .. | 3·8 | | | | | | |

NOTE.—Ore lost 16 per cent. of its weight in leaching, in addition to the 2·6 per cent. lost in roasting. The "original ore" equivalent to 1,220·18 tons. Residue sent out therefore = 1,517 tons, on which cost is calculated.

*Table showing Approximate Losses in Metals in Leaching.*

| Ore treated. | Tons net. | Average assay. | | | Contents. | | | Per cent. losses. | | |
|---|---|---|---|---|---|---|---|---|---|---|
| | | Ag. | Pb. | Zn. | Ag. | Pb. | Zn. | Ag. | Pb. | Zn. |
| | | oz. | p. c. | p. c. | oz. | tons. | tons. | | | |
| Charged "original" | 1517 | 16·5 | 24 | 26·8 | 25,030 | 365 | 406·556 | * | | |
| Residue sent out ... | 1220·18 | 29·9 | 29·9 | 9·94 | 24,730 | 365 | 121·0 | 1·2 | Nil | |

The extraction of zinc is not particularly good here, owing to the fact that no finer screens than 30 mesh could be obtained for the re-grinding mill, and to leach this size of grain more perfectly would have demanded excessive time in the agitators. Also, the washing of filter press cakes was not by any means perfect in this test, owing to a series of small accidents.

* Loss of silver is probably nil, see apparent gain in roasting.

Digitized by Google

That this cost could be reduced by over 2*s*. by merely ensuring a regular output of 1,000 tons per week in place of intermittent work is certain, therefore 4*s*. is the figure adopted below.

*Percolation leaching.*—For this class of leaching it has so far proved absolutely essential to agitate the ore and the solution together mechanically whether sulphuric acid or ferric sulphate, or mixtures of the two are employed as solvent. The author has long desired to leach the ores by percolation, because there is no doubt that, if it were possible to do this, the process would be cheapened and simplified. So far all experiments in this direction have only proved that it is impracticable both on account of the fineness of the ore to be leached rendering the percolation at best very slow, and on account of the strong tendency of the vats to become blocked up long before the leaching is perfect. Even if it were possible to satisfactorily roast the ores in a coarse form suitable for percolation, which it is not, the tendency to block in the vats would still prohibit this form of leaching. The tendency is more marked with ferric salts in the solution, but is manifested to a prohibitive extent even without them. The author attributes the cause of this to the ferric salts themselves, which, whether present or not in the original solution, are formed by leaching out the ferric oxide contained in the ores in small quantities, also to the formation of gelatinous silica in the charge by the decomposition of silicates. The ferric salts thus formed then precipitate ferric hydrate on coming in contact with excess of ZnO in the lower layer of the charge, and the charge in most experiments was well leached for a few inches down from the top and then blocked up more or less completely by an impervious stratum containing much iron and gelatinous silica. Moreover, all hope of success in this direction appears to be precluded by the fact that it would then be necessary to roast the ore in a coarser form suitable for percolation, and experience with roasting the coarse ore shows that it cannot be done economically. The roasting would be extremely slow and would require excessively large furnace plant for a small output. It is nevertheless a tempting field for further experiment. Several vats of coarse ore and slimes were finally leached successfully, though the time required ran into weeks, so that something like 10,000 tons of ore would require to be under treatment at one time for an output of 1,000 tons per week. The cost of 100 large vats for this purpose would not of itself be excessive, and would certainly compare favourably with the cost of agitating and filter-pressing plant for the same output, and the working cost would be much lower, but a certain

Digitized by Google

unreliability and a tendency for the charges to completely block up without apparent cause makes it impossible to recommend this method as a practicable one at date.

No. 6. *Separating the residues from the solution.* — For this particular work the author believes that the only possible plan on a large scale is the employment of filter presses. In the early work at Broken Hill and Grays a system of settling tanks was used, but the difficulties of decantation and washing the solution out of the residues were very considerable, owing largely to the presence of gelatinous silica. This substance is so prevalent in the leached ore that unless pressure is used, as in a filter-press, much zinc solution would remain with the residues. Even with the pressure of a filter-press the cakes which leave the press have the resilliency of, and a remarkable resemblance to, india-rubber, and still contain some 35 per cent. of moisture, though quite solid and dry to the touch.

In the works at Cockle Creek 15 large presses are employed, each having 50 plates about 3 ft. 6 in. square, and each holding when full about 1½ kilo-tons of residue (dry weight). The presses are arranged in three sets of five, and are connected to an 8-in. supply main, which is divided into three sections capable of isolation from each other by gate valves. Special steam filter-press plunger pumps, fitted with constant pressure governors, feed the supply main, and draw their supply by suction pipes directly connected into the bottom of the large stirring vats already mentioned. The clear liquor discharged from the filter-presses flows into large storage tanks sunk below the floor level, and built of timber and brickwork lined with lead.

The cake discharge from the filter-presses, which weighs approximately 2 tons per press (with moisture), falls into hoppers leading to a common conveyor, which carries the material to the dump, from which it is afterwards taken to the briquetting plant for smelters. The filter-presses and pumps are the design and make of Dehne & Co., Halle, and in the completeness of design, convenience of manipulation, and the many devices for economising labour, leave little to be desired. It is, however, at best an expensive and complicated machine.

The operation of the presses is as follows :—

After the presses are closed several pumps are started simultaneously on a bank of five presses, and if the mud is of the right consistency, especially not too thin or cold, the pressure on the presses will be only a few pounds, and a copious stream of clear liquor will flow for 20 or 30 minutes, when the presses will

Digitized by Google

be nearly full. The main is then isolated, and one pump only is used to force up the presses to about 40 to 60 lb. per sq. in., which usually requires another 15 minutes. The pumps are then turned on to another lot of presses whilst the first lot is washed by means of fresh water under a pressure of about 50 lb. per sq. in. This washing-out of the residual salts is a very important matter from an economical point of view, as not only is the zinc lost which is not washed out, but the corresponding sulphuric acid is also lost, and both the zinc and the sulphuric acid will be detrimental in the smelting department. It is therefore most important that as little "zinc soluble in water" shall be left in the filter-cakes as possible.

It is also desirable to keep the bulk of the wash-water as low as possible, as it all, or its equivalent, must be evaporated during the subsequent zinc recovery process. The best method of washing is a step-by-step method. The cakes are first washed with a solution of, say, 30 grm. zinc per litre obtained from the previous wash, and the first discharge of this wash, strengthened to about 80 grm. per litre by passing through the cake, is added to the working solution. The washing is finished with a quantity of fresh water corresponding to the portion sent away, and this weak solution is added to the intermediate solution for use again.

In practice, owing to various accidents to the water supply, the average washing over 3,000 tons of the ore leached was not as good as could be desired, but the author is satisfied from observation that not more than 1 per cent. of "zinc soluble in water" need be left in the residues after washing when permanent conditions are established. This is satisfactory work.

The construction of a modern filter-press is too well known to need description here, but it is a most ingenious and interesting contrivance.

After the cakes have been washed and allowed to drain a little while, the press is opened and the cakes dropped out into a hopper.

Two men suffice to open and close up a bank of five filter-presses in one hour, and the same men see to the replacement of defective cloths and the general work of the press room. The cloths are an expensive item, good cloth costing 1*s.* 7*d.* per yard in Australia, and a large press requiring nearly 120 yards; but by intelligent care, and especially by using an old cloth underneath a new one to protect it from the rusting effect of the iron surfaces, and by systematic continuous work in which the cloths are never allowed to dry, the cloths will last many months, and the total cost per ton will not be excessive. If it is desired to lay up a press for

Digitized by Google

any reason the cloths should be taken off and soaked in fresh water before allowing them to dry, otherwise they will rot.

Five presses of the size described will discharge 10 tons of hydrated residue every three hours in ordinary work, so that the capacity of the 15 presses described is well up to 1,000 tons dry weight of residue per week. The first cost of this plant is a heavy item. For the Cockle Creek Plant it cost £12,000 for presses and pumps, without fixing, or cost of tanks, buildings, &c.

The cost of filter-pressing came out as follows over the same 1,500-ton test, as has been described for the leaching :—

| | s. | d. |
|---|---|---|
| *Labour :—* | | |
| Foremen .. .. .. .. .. .. | 0 | 8·9 |
| Mechanics .. .. .. .. .. .. | 0 | 5·9 |
| Enginedrivers and Attendants .. .. .. | 1 | 0·06 |
| Press hands .. .. .. .. .. | 1 | 5·5 |
| Conveyor Attendants .. .. .. .. | 0 | 3·7 |
| *Stores :—* | | |
| Filtercloth (all left over in good condition) .. | 2 | 2·2 |
| Sundries .. .. .. .. .. .. | 0 | 5·5 |
| *Other Accounts :—* | | |
| Proportion of Boilers .. .. .. .. | 1 | 0·0 |
| Maintenance .. .. .. .. .. | 1 | 0·3 |
| Total .. .. .. .. | 8 | 8·06 |

In this work the weekly output was hampered by deficient supplies of acid for the leaching, necessitating largely-increased labour costs, also the filter-cloth was not nearly worn out when the work ceased. Carefully considering all points, the author is certain that 5*s.* per ton of ore will cover this operation on an output of 1,000 tons per week.

*Note.*—Acid Supplies. The cost of purchased acid at the Works worked out at £6 per ton of (100 per cent.) $H_2SO_4$ = 1*s.* 2·2*d.* per unit, including maintenance of railway trucks and tanks and freight.

The cost of manufacturing the same acid from the Hasenclever Furnace gases is estimated at £1 10*s.* per ton (100 per cent.) acid = 2·8*d.* per unit.

In practice with a good roast it requires 1·5 unit of $H_2SO_4$ for one unit of zinc rendered soluble in water. Unless the roasting is good the consumption of acid is greater, owing to the inevitable absorption of acid by the lead and the absence of sufficient acid in the ore to compensate for this loss. It follows therefore that if 20 units of zinc are to be extracted, 30 units of acid must be



Digitized by Google

furnished besides what is contained in the roasted ore. If 22 units of zinc are extracted, which is about the best possible work with 25 per cent. ore well roasted and re-ground, it will require just 33 per cent. of $H_2SO_4$, or one-third the weight of the ore. Now the cost of furnishing this acid will evidently depend entirely upon the system of treatment and regeneration adopted for the solutions, as will be seen hereafter.

Nos. 7 and 8. *Briquetting and Smelting the Residues.*—These are operations more or less familiar to the metallurgist. On the face of it it would appear to a lead smelter that an ore having the above analysis should be capable of cheap and easy smelting in a district where good coke is 20*s.* per ton, and 60 per cent. ironstone and 90 per cent. limestone may be purchased at 16*s.* per ton in any quantities, with lower prices for large contracts.

The estimates made by the Smelting Department for smelting the leached residues at Cockle Creek was—cost 12*s.* per ton of original ore (= about 17*s.* per ton on reduced weight), loss of lead 20 per cent., loss of silver 5 per cent. (besides the ordinary bullion refining charges).

There seems to be no reason to suppose that this estimate will not be realized in regular work when once this is properly established, though one is bound to say that nothing approaching it has yet been realized at Cockle Creek. The costs of smelting on concentrates from the Central Mine mill have ranged as high as £2 10*s.* per ton, and never lower than 30*s.*, which was about the lowest cost, without the roasting costs, when the author left Australia. The few attempts made to smelt these residues without previous briquetting resulted in complete failure, even though the charge used carried a high percentage of other oxidised ores, which is an impossible condition to maintain in practice owing to the scarcity of such ore in New South Wales. The residues have been allowed to accumulate on the ground in consequence. At the time of the author's leaving the Works (in March last) an attempt was being made to briquette the residues before smelting, but the results are not yet known. The losses and costs of the smelting must necessarily be determined with some degree of accuracy before we can depend with confidence on the final results of the treatment of these ores; and in view of the difficulties already experienced at Cockle Creek in this direction, it will be of great interest if some of our smelting members can furnish anything more certain on this point than mere estimates. In the meantime, in all the author's following calculations he has adopted the estimate of cost and losses given by the smelting

Digitized by Google

department as above, but there seems to be a consensus of opinion amongst smelters in Australia that they should be realized.

The cost of briquetting the residues in a dry press brick machine is put at 2*s.* 6*d.* per ton, which also includes stacking and drying the bricks in sheds heated by waste flue gases.

No. 9. *Refining the Bullion.*—This is a well-known operation, and needs little comment. When the bullion, carrying about 60 oz. silver per ton of lead, is sold to the European refiners, a deduction of about 15 per cent. is made from the gross value of the metal contents to cover parting charges and freights home. A considerable advantage would accrue to the Cockle Creek Works, when the output of bullion is regular, from installing a local refinery, as not only is the refiner's charge a high one, but the lead produced by the Colonial refineries has the advantage of the saving of freights both ways when sold in the Eastern markets of China, India, Japan, or in the Colonies.

When gold ores are purchased and smelted with the residues there is a further advantage in a local refinery in consequence of refiner's deductions for gold contained in bullion.

Having now completed our review of the operations on the ore itself, the next part of the subject requiring attention is—

## Part II.—Treatment of the Zinc Solutions.

All that has been described above is of a more or less familiar character to the metallurgist, although many of the operations have never before been put into practice on a large scale. It is the treatment of the solutions for the recovery of the zinc and the regeneration of the leaching acid which forms the necessary key-stone of the arch to a successful process. This has been a happy hunting-ground for many inventors of patent processes, who generally assume that all that has been described above is child's play, and the cost not worth considering.

Some humorous suggestions have been made to the directors and submitted for the author's approval from time to time; the best of all was that of an inventor who discovered that all our troubles would cease if we would only line our vats with gold. As the Company's stock was getting low at the time, and the linings were estimated to cost £180,000, the suggestion was a particularly cruel one.

The oldest method suggested for recovering zinc was to crystallize out the $ZnSO_4$ ($7H_2O$) and heat this salt strongly until the $SO_3$ was driven off and ZnO with various impurities remained



Digitized by Google

behind. The zinc oxide was then to be retorted in the same manner as other zinc ores are treated for the production of metallic zinc. The gases given off in decomposing the $ZnSO_4$ were to be recovered and reconverted into $H_2SO_4$ in lead chambers. This was one of the recommendations made in Dr. Schnabel's report to the Barrier Ranges Mining Association in March, 1892, and the B.H. Prop. Co., under direction of their chief metallurgist. Mr. H. H. Schlapp carried out a small set of experiments to test its practicability. Nothing, however, was done further in the matter at the time.

This process, with various modifications devised from time to time by various inventors, is to-day a possible though a cumbersome and rather expensive method for dealing with the solutions of zinc. In the following account this process in any of its forms is described as "the oxide process," and it must be fully borne in mind that for a proper comparison of this method with the electrolytic methods account must be taken of the cost of installing and working the zinc retorting furnaces for reducing the oxide to metal in addition to the other works.

The most important patented improvements in this process are (1) Hampe-Schnabel Patent (which now appears to have been anticipated by Parnell), by which he effects the decomposition of $ZnSO_4$ at a much lower temperature than is otherwise possible, by the judicious and intimate admixture of carbon and careful regulation of temperature. Although the author formerly looked with some favour on this patent, some later experience with the decomposition of $ZnSO_4$ without admixture of carbon, leads him to the conclusion that the introduction of carbon is unnecessary, and as it very greatly deteriorates the quality of the gases given off for acid making, is to be avoided.

In decomposing the $ZnSO_4$ by heat alone, a high temperature is required, but not so high as to be impracticable in a well-constructed muffle furnace. The gases disengaged then consist of nearly pure $SO_3O$ in molecular proportion, and only diluted with a little air they are ready for reuniting in plate towers supplemented by chambers, while about 40 per cent. of the total $SO_3$ is not decomposed at all, and can be collected in water in the towers. Though much experience has not been gained on this subject on a large scale as yet, it is most manifestly a simpler and cheaper proposition to make sulphuric acid from the concentrated mixture of $SO_2$ and O than from the mixture of $SO_2$, CO, $CO_2$, N and air in a dilute form resulting from the use of carbon to assist the decomposition of the sulphate.

Digitized by Google

The next patent of importance is the author's own method of getting the zinc salts out of the solution without the necessity of crystallisation, which operation in practice on a large scale would no doubt be a serious difficulty. This method consists of simply evaporating the solution to a syrupy consistency (about 250 grm. Zn. per litre), and then thickening it to a pasty consistency by adding a proportion of zinc oxide, and stirring in a pan. The resulting paste is easily dried in the air and dealt with in a furnace, and moreover yields up its sulphuric acid more readily than, and does not melt or blow like the crystallised hydrated zinc salt does. A portion of the resulting charge of ZnO is kept back for use in thickening the next batch of solution, and the remainder is finished at a very high temperature in an open hearth or even in a muffler, whereby the entire sulphur contents are given off, and the ore is reduced to a physical condition very suitable for cheaply retorting to metallic zinc. A small loss of sulphur gases is occasioned by the last heating if done in an open hearth, and this can conveniently be replaced by some of the gases disengaged in roasting the ore. For this purpose a few muffle furnaces may be included in the roasting plant so as to get this portion of the gases into the chambers undiluted by fire gases.

The cost of working the oxide process, in as far as it is different to the electrolytic process described below, has been determined experimentally on some 50 tons of ore treated in the author's old experimental works at Broken Hill, with the exception of making the sulphuric acid (which could not be done in the absence of works for the purpose) and smelting the zinc oxide to metal in retorting furnaces.

Everything points to a low cost of acid manufacture under the conditions which would obtain in this process, but in the absence of practical experience on a large scale, the author has estimated the cost at the usual cost of making acid in Australia from the gases given off by burning sulphur or pyrites.

In the same way the retorting of the 70 per cent. to 75 per cent. oxide quite free from sulphur produced by this process should be a cheaper operation than the retorting of the usual 40 per cent. to 50 per cent. roasted blende, but in the absence of practical experience the author adopts the figures usually given for the latter work modified to suit Australian conditions.

The following estimate of the oxide process operations is the nearest the author can state them from experience up to date, but he has now very little doubt of their correctness :—

Digitized by Google

Per ton of original ore.

| | £ | s. | d. |
|---|---|---|---|
| No. 14. Evaporating solution .. .. .. .. | 0 | 3 | 0 |
| „ 15. Mixing to paste .. .. .. .. .. | 0 | 2 | 0 |
| „ 16. Drying and furnacing paste .. .. .. | 0 | 6 | 0 |
| „ 17. Finishing off oxide .. .. .. .. | 0 | 1 | 0 |
| „ 18. Making acid from gases .. .. .. .. | 0 | 10 | 0 |
| „ 19. Retorting zinc oxide to metal .. .. .. | 1 | 5 | 0 |
| „ 20. Supplying deficient gases .. .. .. .. | 0 | 1 | 0 |
| | £2 | 8 | 0 |

The recovery is assumed to be 20 units of zinc out of 22 extracted from the ore.

The works required for all these operations are necessarily when totalled up very extensive and costly, and a process involving so many operations as this does, before the zinc is obtained in metal and the acid regenerated, still leaves something to be desired in the direction of simplicity, cheap working, and capital outlay.

It has frequently, as a more direct and economical treatment of the solutions, been attempted to deposit the zinc electrolytically and simultaneously regenerate the acid by the electrolysis.

Nos. 10, 11, 12, and 13. *Electrolytic Deposition of Zinc.*—The earliest notice of a process for this purpose appears to be the account of Letrange's process contained in many old text books. This process was obviously incomplete and impossible in the form in which it was described, but it contained the germ of the leading principle of all this class of processes which have been brought out since, and is therefore more noteworthy than the host of more or less similar inventions which have followed it. Letrange proposed to leach the ore by percolation, and electrolyse the zinc sulphate solution in an open bath with insoluble anodes and cathodes of sheet zinc, removing the solution and replacing it cyclically between the leaching vats and the electrolysis vats. The limitations to this are (1) that it is impracticable, as already pointed out, to conduct the acid leach by percolation; (2) that it is impracticable to carry on the electrolysis in an open vat without diaphragms to a point far enough to yield a solution of sufficient strength of free acid for practical leaching by agitation and filtering; (3) a purifying and rectifying process must essentially be introduced between the leaching and electrolysis to render the deposition of solid zinc possible.

The first point has already been dealt with under the head of leaching, where it is shown that at present it is impossible to regard the percolation leaching as practicable.

Digitized by Google

The second point will be better understood when it is stated that the best practical conditions for electrolysing zinc sulphate solutions are that about 120 grm. of zinc and three to five grm. of free $H_2SO_4$ per litre should be present in the bath. If more acid is present a tendency is manifested for the acid to re-attack the deposited zinc, and on a large scale this is very troublesome. It is therefore manifest that if a solution with more than 5 grm. free acid per litre is to be obtained by electrolysis for leaching, a separating partition must be provided to keep the acid formed at the anodes from mingling with the cathode solutions. Now for economical work in the agitators, presses, heating and purifying apparatus, it is essential to use leaching solutions containing upwards of 60 grms. $H_2SO_4$ per litre and a strength of 100 grm. per litre is even more advantageous. If this condition is not fulfilled, the huge volumes of liquor and thin mud which must be dealt with outside the electrolysis department make the process economically impracticable.

The third condition, that of the necessity of purifying and rectifying the solution, is a vastly important one. The accumulation of manganese has already been referred to. It has so far proved too expensive to remove the manganese from the solution by chemical means such as bleaching powder, chlorate of potash, potassium permanganate, or chlorine gas, all of which have been used for the purpose, besides which all such reactions result in extraneous matter which goes into solution, and if the regenerative process is to be truly cyclic, would accumulate infinitely and by-and-bye stop the process altogether. Iron gives no trouble in this way, as it is peroxidised in the electrolysis and removed in the following leaching, and so cannot accumulate infinitely. Alumina also, besides doing little (if any) harm in the solution, is dissolved in such small quantities that no practical trouble has ever resulted or appears likely to result from its accumulation.

Not so manganese. The accumulation of manganese salts is quite appreciable and has hitherto prevented true cyclic working, and necessitated the continual discarding and renewal of the working solution in regular instalments. These renewals have represented a considerable proportion of the total solution in work at each cycle, and unless the zinc in these discarded solutions can be recovered and the sulphuric acid cheaply regenerated for the manufacture of fresh solution to replace that discarded, the process will be wasteful of zinc and expensive for acid renewals. It is not yet quite certain whether by the use of only strong solutions undiluted by live steam the manganese could be

Digitized by Google

prevented altogether from going into solution, and therefore, at the date of writing, the truly cyclic electrolytic process is debarred from complete success by the above consideration. It is, however, both practicable and economical to work the process semicyclically, recovering by the electrolytic method 50 per cent. to 75 per cent. of the zinc, and treating the discarded solutions by the oxide process for recovery of the remaining zinc and regeneration of the solvent. This was the plan of operations contemplated by the author for the Cockle Creek works; and although unavoidably complicated, it constitutes a feasible, sound, and truly cyclic process for dealing with the Broken Hill ores, as will be seen by the cost sheets given below. That this plan was not carried through owing to causes beyond the author's control, and that the attempt to work the electrolytic process cyclically alone (involving heavy losses of zinc and heavy acid costs) did not result in commercial success, in face of the enormous reduction which took place in the value of the ore, is much to be regretted, though not to be wondered at.

Besides the removal of substantial and recognised impurities, it is further necessary, for the deposition of solid zinc, that the solution be brought into a particular state, which at the present time is only empirically understood. A solution of zinc taken directly from the ores and electrolysed without any intermediate process will produce no solid zinc at all, but a hideous black mass of spongy zinc, which, owing to its well-known physical conditions, it is absolutely impossible to deal with commercially. From this condition a solution will pass through an infinite number of gradations to a state in which it is just as impossible to produce spongy zinc, and the deposits are obtained in a beautiful homogeneous form similar to the samples brought here to show you to-night.

This truly remarkable phenomenon is, as has been stated, still practically unexplained. Prof. R. Threlfall, of the Sydney University, for about six months worked assiduously at a set of experiments calculated to explain it; but although much useful work was done, the result has not furnished a satisfactory explanation of the phenomenon of zinc moss or sponge. Many others before and since have worked, and are still working, in this field, and Messrs. Siemens' and Halske's and other theories on the subject are well known, but lack general confirmation.

The nature of the spongy deposit varies through an almost infinite variety of forms, ranging from a slimy loose mud formed in excessively "bad" solution, through successive stages of

Digitized by Google

dendritic arborescent and capsular deposits (some of which are very beautiful but all quite useless), until merely a rough or irregular and hard deposit in nearly perfect solutions indicates that the conditions are nearly "good." When absolutely "good" conditions are obtained, the deposit closely resembles the physical character of a copper deposit, and is in every respect satisfactory. This condition of solution is by no means unstable, as has been supposed by some workers in this field, but it is liable to instant disturbance by the introduction of foreign elements in very minute quantities, and therefore requires the utmost care in the conduct of the operations of the work to ensure its continuance in a cyclic process. An "attack" of spongy zinc in the electrolytic works is a serious matter, necessitating the stoppage of the generating machinery, and in the case of the Cockle Creek Works the removal and replacement of 12,000 cathode plates each 4 ft. 6 in. × 1 ft. 0 in., with the accompanying mess and trouble of cleaning out the vats and of course a simultaneous stoppage of the leaching works. A frequent recurrence of such accidents would spoil the peace of mind of any Works Manager.

It has not yet been found possible to detect by chemical analysis any difference between the two conditions of "good" and "bad," in a solution, though, of course, any foreign matter in considerable quantities is readily detected.

The author will, therefore, confine himself here to a short account of the practical conditions it has been found necessary to observe in order to produce continuous useful deposits. That these conditions can be cheaply and easily maintained by the author's method is now certain.

The conditions necessary are first to remove any traces of foreign matter of the lead, copper, silver, gold, antimony, arsenic, &c., groups, and this was done very easily by agitating the solution with zinc grey. Then it was, and is still necessary, for unexplained reasons, to subject the solution to an oxidizing influence. For this purpose chlorine, permanganate of potash, chlorate of potash, bleaching powder, &c., have all been used with technically successful but costly results. To replace both these operations, the author has lately exclusively used, with complete success, an open air cascade of launders, filled with broken pieces of cast iron or iron turnings or borings. By circulating the liquor over the cascades after it leaves the leaching, it is at one operation and very cheaply brought into a condition fit for electrolysis, and the author thinks that this simple device will prove of extreme importance in the electro-metallurgy of zinc in the future. It was only

Digitized by Google

towards the close of the career of the Cockle Creek Works that this method was devised, but there is no doubt as to its permanent practicability, as 100 tons of zinc were deposited from solutions treated only in this way, and on which no chemicals at all were employed.

The action of the air in cascading or of the oxidising chemicals formerly employed is little understood, but the author thinks that it may have reference to the oxidation of minute traces of sulphurous acid and organic matters. It has been frequently observed in our experiments that organic matter such as wood-juices from new vats, oil (introduced by boiling with open jets from the boilers), &c., &c., will instantly disqualify the solution. The author has observed too that, contrary to many written statements of various authors, either sulphite of zinc or sulphurous acid in smallest quantities has the same effect. The one atom of oxygen set free at the anode when electrolysing with insoluble anodes a solution of sulphate of zinc, will produce the same oxidising effect as the chemicals or the cascades, so that it is possible experimentally to electrolyse a "bad" solution until it becomes "good." The method adopted by the author of using a certain proportion of such "open anode vats" in a depositing system consisting of "diaphragm" vats, is in practice found both to maintain the proper degree of acidity in the catholyte which circulates freely throughout the whole system, and to promote the continuous deposit of good zinc for the above reason.

The apparatus in the vat room may here be briefly noticed. The room is 175 ft. by 100 ft., arranged in three bays of 33 ft. wide; 144 vats are set in 6 rows of 24 each on a crossed girder floor raised 5 ft. above a concrete ground floor. Small columns of cast-iron suitably spaced support the floor and the vats, which all complete weigh some 3,000 tons. Each vat is 6 ft. long, 4 ft. wide, and 5 ft. deep, and contains 96 cathodes, each 4 ft. by 1 ft., and 104 anode plates of equal size. Each vat is divided into two halves for convenience of changing plates, &c. 13 diaphragm cells, consisting of a wooden frame, strutted over with No. 1 Navy canvas, are fitted into each half vat (making 26 frames per vat in all), and receive the anodes. Each frame has a $\frac{3}{4}$-inch pipe communication of indiarubber hose leading to a common main on the ground floor. A second main laid alongside the other has a single $1\frac{1}{2}$-in. indiarubber connection into the body of each half vat. A short overflow spout corresponding to each inlet pipe, leads the solutions out of the upper part of the vats into launders, by which they are conducted

Digitized by Google

back to the circulating house. The mains are all connected to their respective supply tanks contained in a separate room at the opposite end of the vat room to that occupied by the generating plant. In this room also a number of steam centrifugal pumps are set to circulate the various liquors. The electrical connecting bars run in three separate circuits over the upper part of the vats, and contact is made between the various bars and the plates by furnishing the latter with projecting lugs to support the plates and make electrical contact by resting on the bars. A little amalgam of tin is used to make a good and permanent contact between the numerous plates and the bars. (Over the surface of all the vats suitable travelling cranes and supplementary tramways are arranged.)

It is beyond the scope of the present paper to enter into a more detailed description of the apparatus, which would also be impossible to describe without many drawings. At another time the author may recur to this portion of the subject.

The design of this rather extensive electrolysis plant presented many problems which were successfully solved, and the entire apparatus worked and lasted well with the exception of a few items. The pumps used to circulate the acid liquors were very rapidly destroyed when ferric chloride was in use, and so far no metal has been found to stand that liquor, which consequently had to be handled by wooden machines. Now that only sulphate salts are employed, no trouble is experienced with pumps made of antimonial lead, which is probably the most practicable material. If it were possible to construct large centrifugal pumps of glass or porcelain at a reasonable cost, these would be the best to use. Nearly 500,000 litres of the acid solution per hour require pumping when all the sections of the plant are in work; thus it will be evident that the ordinary forms of acid pumps are out of the question. Antimonial lead centrifugals stand well for the cathode solutions, of which still greater volumes have to be pumped, and ordinary cast iron stands far better than most so-called anti-corrosion alloys. On the change being made to sulphate solutions, the carbon anodes formerly in use had to be given up entirely, but a very satisfactory substitute, which is also cheaper, was found in lead plates. The fitting out of the plant with these anodes involved casting up over 150 tons of lead, and 12 tons antimony, into plates weighing 100 lb. each. If the lead plates are to be used with solutions containing chlorides, it is necessary to alloy antimony with the lead in proportions of about 6 per cent. to 10 per cent. to minimise the corrosive action. With sulphate solution, pure lead anodes

Digitized by Google

last extremely well, becoming soon coated with a fairly conducting film of peroxide, which very slowly increases in thickness at the expense of the metal beneath. Judging from the experience gained with lead anodes, with a current density of 10 amperes per square foot, a set will last at least 12 months, and even then the lead can be nearly all recovered from the peroxide at moderate expense. The E.M.F. with lead anodes is always a trifle higher than for the same current density with carbon anodes. This is especially so at high densities, and is owing to the comparatively bad conductivity of the peroxide.

The next important consideration in the electrolytic process is the power required and the cost of fuel, labour and maintenance of generating plant to produce it. The output of zinc in any single circuit of course depends on the current passing and the number of vats in the series. The number of vats in a series for a given voltage again depends on the volts required for each vat. To determine the latter it is fallacious to place too much reliance on calculations based on thermo-chemical considerations. The opposing electro-motive force of a given bath is only one factor in determining the requisite electro-motive force to send a certain current through it, and the remaining factors, varying as they do with the nature of the plate surfaces, the composition of the solution, and the current density, are of sufficient importance to invalidate the calculation more or less completely. The only reliable basis the author has found on which to base designs of apparatus is actual experiment on a small scale with an exact imitation of the conditions which will obtain in practice. In this manner the author has determined and since verified on a large scale the practical electro-motive forces necessary per vat under the leading conditions of his work.

They are as follows in a solution of 120 grms. Zn per litre as $ZnSO_4$ acidified with 5 grammes per litre $H_2SO_4$:—

| | Lead anodes and diaphragms. | Carbon anodes and diaphragms. | Cast-iron anodes and diaphragms. | Rolled steel anodes and diaphragms. |
|---|---|---|---|---|
| 5 amperes per square foot | 2·75 | 2·7 | 0·7 | 0·5 |
| 7½ „ „ „ „ | 2·85 | 2·8 | 0·8 | 0·6 |
| 10 „ „ „ „ | 3·0 | 2·9 | 0·9 | 0·7 |

Without diaphragms the voltage will be approximately 0·25 V lower all round with 5 amperes per square foot, or 0·5 with 10 amperes.

Having determined these factors and selected the anodes and number of vats of each kind to be used, the initial voltage necessary or *vice versâ* can be at once determined. The quantity

Digitized by Google

of zinc deposited in an hour by an ampere is theoretically 1·21 grm., but the author has found in practice that not more than 1 grm. can with certainty be reckoned on. This is no doubt partly owing to a small leakage of current from vat to vat, which is designated the inter-vat leakage, and to slight re-solution of deposited zinc in the free acid of the solution. With "good" solution it is quite safe to calculate 1 grm. of zinc to the ampere hour as the actual yield. Having the above two factors of the voltage and the current yield firmly established, it is a simple matter for the engineer to determine the power necessary and, for any given district, the cost. But the number of vats in the circuits will be different according to the material of the anode used and the presence or absence of diaphragms, and this will again be determined by the conditions necessary for the cyclic working of the solutions as shown below.

At Cockle Creek two circuits were arranged, each capable of taking 5,000 amperes, and the initial voltage employed on each circuit was 120 volts. With this voltage, which I believe is the highest which has yet been used for electrolytic work, the author experienced very little trouble from pole to pole leakage, which was finally reduced to 3 per cent. of the total current, but it proved necessary both to have 5 feet of india-rubber hose for each connection between a vat and a lead main, and to insulate each vat from the iron floor by blocks of india-rubber and paraffined wood arranged suitably for the proper distribution of the weight. It was also found advantageous to break the continuity of all the lead supply mains at suitable points by inserting short lengths of earthenware pipes. In this way the effective insulation was made practically perfect, and the author thinks that 150 volts might safely be used in large electrolytic installations providing the inter-vat leakage loss did not increase too much. As the cost of electrical conductors is a very heavy item of construction, the use of as high a voltage as proves practicable will be found advantageous.

As a further step towards the clear understanding of the later developments of the electrolytic process at Cockle Creek, the following is a description of the trial works which were erected at Grays from Dr. C. Schnabel's report to the Sulphide Corporation thereon.

> "In the Works at Grays the purified solution which is returned to the electrolytic department contains 30 grammes zinc per litre as chloride, and an equivalent amount of sodium per litre as sulphate.
>
> "The electrolytic vats are 30 in number, 20 of which have iron anodes

Digitized by Google

and 10 carbon anodes. Each vat contains 60 cathode plates, 3 ft. × 1 ft., divided into 10 rows of 6 each, and 66 anode plates, divided into 11 rows of 6 each. The deposit is made on both sides of the cathodes, the normal current density being 5 amperes per sq. ft. of cathode surface (= 50 amperes per sq. metre app.). The total current of 1,800 amperes is passed through the 30 vats in series, and a good compact deposit of zinc is obtained on the cathodes, while the iron salts formed at the anodes are prevented from reaching the cathode plates by means of diaphragms of ordinary stout canvas, through which the iron salts do not diffuse so long as the level of liquid in the zinc department is maintained slightly higher than in the iron or carbon departments.

"There are three separate batches of solutions, viz., the zinc, the ferrous, and the ferric solutions respectively, and they are maintained continuously in steady circulation around the respective plates by means of a system of pumps and pipes.

"After this circulation has been maintained for a given time (which time may vary according to the amount of iron it is required to impart to the solution and the amount of zinc to extract from it), the whole or a portion of the solution around the carbon anodes being completely oxidised, is removed to the leaching department, and an equivalent portion of solution is removed from the iron anode compartments to the carbon anode compartments. A third portion of solution is removed from the zinc compartments to the iron anode compartments, and finally an equivalent portion of the purified solution from the leaching department is conveyed to the zinc compartments.

"At Grays 5,000 litres of solution pass through the vats in successive steps, as above described, in each hour. If the full current of 1,800 amperes is used, the solution leaving the apparatus at the rate of 5,000 litres per hour, will contain an average of 7·2 grammes of iron per litre, and the solution of zinc entering the apparatus will be depleted of 12·6 grammes of zinc per litre. Working at this rate, the plant at Grays could produce 12 tons of zinc per week. The average rate of production would be 10 tons in practical working, and the leaching solution is allowed to leave the apparatus with an average composition of 5 or 6 grammes of iron per litre, after having been depleted of 9 to 11 grammes of zinc per litre. The average current for this effect is 1,500 amperes.

"The electro-motive force required for the vats at Grays is 1·1 volts for each iron vat (which is about one-third of what would be required if insoluble anodes were employed) and 2·7 for the carbon vats (which is also considerably lower than would be required if the ferrous salts were not present to absorb the products of decomposition at the anodes). The loss of power in the conductors amounts to 10 per cent. of the total power given out by the dynamo. The above voltage represents an average of 1·8 volts per vat throughout the plant, inclusive of 10 per cent. loss in the conductors. The weight of deposit obtained with a given current is found to be fully up to, and in some cases more than, the theoretical amount per ampere hour calculated for neutral salts of zinc, viz., 1·2 grammes. The slight excess is accounted for by the presence of basic salts of zinc in the solution.

"The deposit of zinc obtained is hard and lustrous, and can be removed

Digitized by Google

from the plates with comparative ease. The purity of the deposit is high, there being an entire absence of lead and only the minutest traces of iron, as shown by a great number of analyses. During the depositing of zinc from the solution it is allowed to circulate somewhat rapidly, and should any considerable amount of iron be found in it, due to irregularities of working or leakage from the iron compartments, the iron is removed after being oxidised by means of small quantities of oxide of zinc added to the solution outside the electrolytic apparatus. Small traces of iron do not, however, interfere in any way with the deposit. (At Grays, iron has been present up to half a gramme per litre without detriment.)

"The zinc recovered in this manner has only to be re-melted in iron kettles.

"The electrical power at Grays is produced by water-tube steam boilers of modern type, which evaporate 10 lb. of water to steam at 160 lb. pressure with 1 lb. of best Welsh coal. The steam is utilised in a Willans engine, having compound cylinders, and driving by direct coupling a large Siemens dynamo also of modern construction. We are able from a vast mass of evidence of modern practice in the production of electric energy, together with the direct readings of the instruments provided at Grays, to state the total consumption of steam by the engine at 20 lb. per I.H.P., and the total efficiency of the steam engine and dynamo combination at 85 per cent. These figures are quite safe for any large size generating plant; and by making an allowance in the ratio of 10 to 8 for the superiority of Welsh coal over Newcastle coal, we are able to state the maximum amount of coal required to deposit one ton of electrolytic zinc at Newcastle at 2·65 tons. This is equal to 1,904 electrical horse-power hours per ton of zinc produced under the above conditions.

"The iron anodes consist of slabs of cast-iron; the carbon anodes of slabs of prepared graphite. The consumption of cast-iron theoretically is 57 parts of iron for 100 parts of zinc. In practice it will be necessary to provide 66⅔ parts of iron for 100 parts of zinc, and to re-cast 25 per cent. of the iron used from the remnants of the plates left after dissolving. It is not necessary to have smooth or perfectly true plates of iron. A rough sand casting answers perfectly well, and could be cast in the same manner as pigs are cast from the blast furnace direct.

"As to wear and tear of the apparatus, it would be impossible to state accurately the cost of renewals from experience gained in several weeks' working of the plant which I have witnessed. I am able to say, however, that during this time and the previous working of the plant, which has extended more or less continuously for some months since the completion of the works, no signs of unusual wear and tear have been manifested, but on the contrary the apparatus gives evidence of considerable durability. The canvas diaphragms, which would naturally be looked upon as most liable to deterioration, show no signs of destruction by the continual immersion in the liquid, and I am of opinion that these diaphragms, when properly selected and fixed, will last at least a year in continuous work."

This is a description of work carried out with chloride solutions which were worked in a basic condition. In such solutions the theoretical proportion of iron to insoluble anodes is observed in

Digitized by Google

practice and proves the correct one. When, however, chlorides are dispensed with, sulphates adopted, and the solutions worked acid, the proportion of insoluble anode vats must be increased, because ferrous sulphate does not in practice oxidise to the ferric state at the theoretical rate as ferric chloride does; but normally (in solutions as strong as used in practice) at about 75 per cent. of the theoretical rate. The remaining 25 per cent. of the current sets free a corresponding amount of $H_2SO_4$, accompanied by the escape of an atom of oxygen from the anode. Now, if the normal proportion of two iron vats to one insoluble anode vat were observed, this deficiency of oxidation would naturally result in a continual accumulation of unoxidised ferrous salts in the working liquors (as ferrous salts are not precipitated in leaching), a condition which would soon make the solution unfit for depositing zinc. This effect would be further accentuated by the fact that a certain number of "open anode" vats are employed to keep the catholyte slightly acid, and all the free acid thus formed goes with the spent catholyte into the iron cells, and there dissolves a still further quota of iron as ferrous sulphate.

With this method of working, therefore, it becomes a matter of rather intricate calculation to so proportion the three classes of vats to each other that practical cyclic conditions shall be maintained.

The necessary conditions at Cockle Creek were—

(1) *Voltage.* That the total E.M.F. for each circuit shall be approximately 120 v.

N.B. The voltage per vat of each kind, to allow a definite current per square foot to pass, has already been stated above, as determined by experiment.

(2) *Iron.* The total iron dissolved into the liquor shall be proportioned to the total iron oxidised (and removed in the leaching), due allowance being made for the defective oxidation already noticed, and for the free acid in the catholyte.

(3) *Zinc.* The zinc depleted from the catholyte must not be too large a proportion of the whole to avoid disturbing normal conditions of strength of solution; therefore a certain minimum rate of transfer of solution must take place periodically.

(4) *Acidity.* The rate of transfer of solution through the whole system must be so proportioned to the total effect of the current that the acidity of the solutions drawn on

Digitized by Google

for the leaching department shall be within the limits found economical in this operation, viz., 60 to 100 grammes $H_2SO_4$ per litre.

To calculate the number of each kind of vats necessary to secure all these conditions, simultaneously, the author adopts a diagrammatic representation of the whole system, on which all the constants can be filled in and the remaining factors predetermined by calculation.

Now a further consideration of the altered conditions makes it evident that the vats with iron anodes may be dispensed with altogether, and a practical acid leaching solution be more simply obtained by a combination of open anode and diaphragm vats, all with lead anodes producing sulphuric acid and the oxygen gas escaping. The following shows a suitable combination for this purpose :—

| | | | | |
|---|---|---|---|---|
| 3 open anode vats } 37 diaphram vats } | all lead anodes | at 2·7 volts .. | 8·25 volts. |
| | | at 3·0 „ .. | 111·0 „ |
| | Total volts .. .. .. | | 119·25 |

Total vats in one circuit of 120 volts = 40 vats.

Acidity of catholyte solution approximately 5 grms. $H_2SO_4$ per litre.

Acidity of leaching solution leaving diaphragms approximately 65 grms. $H_2SO_4$ per litre after heating and concentration.

Though by this means the output of zinc is reduced for a given power consumption, because a smaller number of vats can only be used in one circuit, the whole of the somewhat large item of iron consumption is dispensed with, and the following account extracted from Dr. Schnabel's report and estimate, and modified in the second column to the new conditions, shows at once that a positive advantage is gained in working costs by this reversion to conditions nearer to primitive simplicity, when, as now, these conditions are made practicable :—



Digitized by Google

*For recovery of twenty tons of zinc.*

| | Average volts per vat, 1·5. With iron anodes. £ | s. | d. | | Average volts per vat, 5·0. Without iron anodes. £ | s. | d. |
|---|---|---|---|---|---|---|---|
| Coal, 60 tons at 7s... .. | 21 | 0 | 0 | 120 tons .. | 42 | 0 | 0 |
| Iron, including carriage .. | 63 | 0 | 0 | .. .. .. | | | |
| Labour .. .. .. | 30 | 0 | 0 | including extra firing and driving .. | 40 | 0 | 0 |
| Melting zinc .. .. | 5 | 0 | 0 | .. .. .. | 5 | 0 | 0 |
| Depreciation of diaphragms | 5 | 0 | 0 | .. .. .. | 5 | 0 | 0 |
| Renewal of lead anodes .. | 5 | 0 | 0 | All vats lead .. | 15 | 0 | 0 |
| Supply of deficient solution | 12 | 10 | 0 | .. .. .. | 12 | 10 | 0 |
| | 141 | 10 | 0 | | 119 | 10 | 0 |
| Total cost per ton of zinc | 7 | 1 | 6 | | 5 | 19 | 6 |

It is the very low price of coal at Newcastle which brings about this advantage against the use of iron anodes.

*Cathodes.*—The question of the cathodes on which the zinc is deposited is an important one. It is absolutely essential for successful work that a clean and uniform surface be provided on the initial plate and maintained as long as possible. In the heaviest of the samples shown here to-night the original plates weighed 7 lb., and after continuing the deposit for 15 days at approximately 7½ amperes per sq. ft. the plates weighed 60 lb. each. During the run when the solution was kept nearly "good all the time" 1·1 grm. of zinc was obtained for every ampere hour passed, but it will be seen that there are some stains on the past history of some of these plates, which resulted in a rather too rough surface towards the end of the operation. The thinner plates exhibited were only allowed to remain in the baths during a few days when the solution was quite perfect, and such surfaces, if maintained, leave nothing to be desired and would permit of the deposit being carried much further than 60 lbs. per plate, a condition very desirable to attain, as it lessens the expense of rolling the cathodes.

The disturbing conditions in this particular run were due to oil introduced into the solution during the leaching by heating with live steam from the boilers, and an insufficient capacity in the cascades to entirely get rid of the effect before the solution was again required for use in the electrolysis vats.

*Melting.*—The system in use for melting up the zinc in iron pots

Digitized by Google

leaves something to be desired. The pots are rather rapidly corroded by the zinc, and should be protected by a firebrick lining, or, better still, a reverberatory melting furnace might be devised with a crucible similar to a blast furnace crucible and a reducing flame.

The author has devised a method of economising the cost of cathode plates by using galvanised iron plates which, when deposited on, are passed through the rolls of an ordinary galvanizing kettle, and in this way stripped of their deposit and left with a perfectly clean surface for deposition of more zinc. This method has been experimented with and promises extremely well. It has been made the subject of a patent, but has not yet been tried on a large scale

Owing to causes over which the author had no control, the operation of the depositing works at Cockle Creek was very intermittent and confined entirely to a very small section of the plant. As every post had to be manned, and the large boilers and machinery kept in operation for an output of less than 1 ton per day at times; this resulted in little saving of actual outlay, but only in a large reduction of effective output. For this reason, and because of the cost of the chemicals somewhat lavishly used at first, the first hundred tons of zinc produced at the works cost £75 a ton, and the second hundred tons, under the direct supervision of the author himself, by the modified process described without chemicals at all, cost £28 per ton. Nevertheless, the latter operations, though nipped ultimately in the bud for reasons connected with an exhausted exchequer, have enabled the author to state with some degree of confidence, the cost of producing zinc from the solutions on this system as follows, when working at the rate of 130 tons zinc per week upwards.

Operation No. 10. *Precipitating copper from solutions.*—This operation so rarely comes into use in treating the Broken Hill ore that it is not considered here. If copper is present, however, the value of the copper recovered will always exceed the cost of recovering it from these solutions.

Operation No. 11. *Purifying solutions.*—The expense of this operation, since cascading has taken the place of chemical purification, is confined entirely to the labour and steam power for pumping the solutions, the labour of cleaning cascades, and the cost of scrap iron. It is certain that these items together will be less than 1*s.* per ton of ore.

Operation No. 12. *Recovery of zinc.*—From very careful deductions drawn from experience to date, the author states the



Digitized by Google

cost of this operation as follows for an output of 130 tons of zinc per week and upwards :—

(*Note.*—Cost stated at per ton of ore = 0·2 ton of zinc.)

| | s. | d. |
|---|---|---|
| *Labour :—* | | |
| Foremen .. .. .. .. .. .. | 0 | 2·4 |
| Mechanics and generating plant .. .. | 1 | 3·2 |
| Chemists .. .. .. .. .. .. | 0 | 2·0 |
| Plate hands .. .. .. .. .. | 6 | 0·1 |
| Pump drivers .. .. .. .. .. | 0 | 2·0 |
| Melting house .. .. .. .. .. | 1 | 6·0 |
| *Stores :—* | | |
| Cathodes 18*s.*—less value of zinc recovered, 13*s.* 6*d.* .. .. .. .. .. | 5 | 6·0 |
| Lead anodes, 7*s.* 9*d.*—less value of zinc recovered, 5*s.* 9*d.* .. .. .. .. | 2 | 0·0 |
| Sundries .. .. .. .. .. .. | 0 | 6·0 |
| *Other Accounts :—* | | |
| Proportion of boilers .. .. .. .. | 8 | 9·5 |
| Maintenance .. .. .. .. .. | 0 | 11·6 |
| | £1 | 7 0·7 |

Operation No. 13. *Evaporating Wash Water and Heating Solutions.*—If this is done by coal heat in tanks direct the cost will be approximately 5*s.* per ton of ore for coal and labour. If waste heat from Hasenclever Furnaces is available the cost will be reduced to 2*s.* per ton of ore.

It is unfortunate in the author's opinion that this work was not continued further.

## Part III.

We have now reviewed all the necessary operations in detail, and the following table shows the total cost of treatment first by the oxide process alone, second, by the electrolytic process alone, and third, by a combination process of two-thirds electrolytic and one-third oxide. With regard to the second column it has already been shown that working the electrolyte process alone is not feasible except the ore is rich enough to stand large losses of zinc and acid, on the accumulation of impurities interfering with cyclic working, and therefore the best practical return is obtained by the arrangement in column 3, by which two-thirds of the zinc are recovered electrolytically and one-third by the oxide process. This arrangement is both eminently practical and desirable in many other ways. It will be seen from the table that the

Digitized by Google

operations as far as No. 9 are common to both processes, and it is only in the treatment of the solutions that any divergence occurs. The costs are as follows:—

| | Oxide process. | | | Electro process. | | | Joint process. | | |
|---|---|---|---|---|---|---|---|---|---|
| | £ | s. | d. | £ | s. | d. | £ | s. | d. |
| Mining the ore costs .. .. .. | 0 | 12 | 0 | 0 | 12 | 0 | 0 | 12 | 0 |
| Carriage to Newcastle .. .. .. | 1 | 2 | 6 | 1 | 2 | 6 | 1 | 2 | 6 |
| Loading and unloading .. .. .. | 0 | 2 | 0 | 0 | 2 | 0 | 0 | 2 | 0 |
| | 1 | 16 | 6 | 1 | 16 | 6 | 1 | 16 | 6 |

| | Oxide process. | | | Electro process. | | | Joint process. | | |
|---|---|---|---|---|---|---|---|---|---|
| | £ | s. | d. | £ | s. | d. | £ | s. | d. |
| 1. Drying the ore .. .. .. | 0 | 0 | 6 | 0 | 0 | 6 | 0 | 0 | 6 |
| 2. Crushing „ .. .. .. | 0 | 1 | 0 | 0 | 1 | 0 | 0 | 1 | 0 |
| 3. Roasting „ .. .. .. | 0 | 4 | 6 | 0 | 4 | 6 | 0 | 4 | 6 |
| 4. Re-grinding the ore .. .. .. | 0 | 1 | 0 | 0 | 1 | 0 | 0 | 1 | 0 |
| 5. Leaching „ .. .. .. | 0 | 4 | 0 | 0 | 4 | 0 | 0 | 4 | 0 |
| 6. Separating solutions .. .. | 0 | 5 | 0 | 0 | 5 | 0 | 0 | 5 | 0 |
| 7. Bricking and drying .. . | 0 | 2 | 6 | 0 | 2 | 6 | 0 | 2 | 6 |
| 8. Smelting .. .. .. .. | 0 | 12 | 0 | 0 | 12 | 0 | 0 | 12 | 0 |
| 9. Refining bullion, 15 per cent. .. | 0 | 8 | 0 | 0 | 8 | 0 | 0 | 8 | 0 |
| Common to all treatments .. | 1 | 18 | 6 | 1 | 18 | 6 | 1 | 18 | 6 |

| | Oxide process. | | | Electro process. | | | Joint process. | | |
|---|---|---|---|---|---|---|---|---|---|
| | £ | s. | d. | £ | s. | d. | £ | s. | d. |
| 10. Precipitating copper .. .. | | .. | | | .. | | | .. | |
| 11. Purifying solutions .. .. .. | | .. | | 0 | 1 | 0 | 0 | 0 | 8 |
| 12. Electro deposition .. .. .. | | .. | | 1 | 7 | 1 | 0 | 18 | 4 |
| 13. Evaporating washwaters and heating | | .. | | 0 | 5 | 0 | 0 | 2 | 0 |
| 14. Evaporating solutions .. .. | 0 | 3 | 0 | | .. | | 0 | 1 | 0 |
| 15. Mixing to paste .. .. .. | 0 | 2 | 0 | | .. | | 0 | 0 | 8 |
| 16. Drying and furnacing .. .. | 0 | 6 | 0 | | .. | | 0 | 2 | 0 |
| 17. Finishing off .. .. .. .. | 0 | 1 | 0 | | .. | | 0 | 0 | 4 |
| 18. Making acid from gases .. .. | 0 | 10 | 0 | | .. | | 0 | 3 | 4 |
| 19. Retorting oxide to metal .. .. | 1 | 5 | 0 | | .. | | 0 | 8 | 4 |
| 20. Supplying deficiencies .. .. | 0 | 1 | 0 | | .. | | 0 | 0 | 4 |
| | 2 | 8 | 0 | 1 | 13 | 1 | 1 | 17 | 0 |

Digitized by Google

SUMMARY.

| | Oxide process. | Electro process. | Joint process. |
|---|---|---|---|
| | £ s. d. | £ s. d. | £ s. d. |
| Mining and delivery at Newcastle .. | 1 16 6 | 1 16 6 | 1 16 6 |
| Operations Nos. 1 to 9 (lead and silver recovery) .. .. .. .. | 1 18 6 | 1 18 6 | 1 18 6 |
| Operations Nos. 10 to 20 (zinc recovery) | 2 8 0 | 1 13 1 | 1 17 0 |
| Total cost per ton of ore .. | 6 3 0 | 5 8 1 | 5 12 0 |

If the ore contain 12 oz. silver, 20 per cent. lead, and 25 per cent. zinc, 95 per cent. of the silver, 80 per cent. of the lead, and 80 per cent. of the zinc were recovered, and valuing these metals at: silver, fine 2*s.* 3*d.*, lead refined £12, zinc £17 10*s.*, there will be obtained from one ton of ore a money value as follows:—

| | £ s. d. |
|---|---|
| Silver, 12 oz. — 5 per cent. = 11·4 oz. at 2*s.* 3*d.* .. | 1 5 7 |
| Lead, 0·2 ton — 20 per cent. = 0·16 ton at £12 .. | 1 18 8 |
| Zinc, 0·25 — 20 per cent. = 0·2 ton at £17 10*s.* .. | 3 8 0 |
| Total net value .. .. .. .. | £6 12 3 |

There is therefore a margin of profit in the case of the joint process of £1 0*s.* 3*d.* per ton when working with fully equipped works at the rate of 1,000 tons per week. For the oxide process alone there is only a margin of 9*s.* 6*d.* per ton; but for the electrolytic process alone, if it should prove practicable to work it truly cyclically and alone, a profit of £1 4*s.* 1*d.* per ton could be earned.

It must not be forgotten that we have taken the grade of the ore at 12 oz. of silver, and we may have to face a possible falling off to something like 8 oz. in the course of the first few years' work. Now there are in the above described treatment, 20 operations, all involving use of labour and fuel, and costing altogether per ton of ore £3 15*s.* 6*d.* (exclusive of mining and carriage). It is practically certain that the cost of each of these operations will be lessened with experience and regular work, and it is to be pointed out that an all round reduction of only 12 per cent. in the cost of treatment (exclusive of mining and carriage) will compensate for a prospective falling off of silver contents from 12 oz. to 8 oz. per ton, or, if the grade of the ore be maintained, will add 50 per cent. to the profit.

The cost of works for this result may be stated with some

Digitized by Google

degree of accuracy by means of the following table, but it is of course well known that no general estimate of this description can be taken as accurate for all localities, as the cost will vary with local conditions :—

| | Oxide. | Electro-lytic. | Joint. |
|---|---|---|---|
| | £ | £ | £ |
| 1. Drying works, 1,000 tons per week .. | 2,500 | 2,500 | 2,500 |
| 2. Crushing .. .. .. .. .. | 4,000 | 4,000 | 4,000 |
| 3. Roasting .. .. .. .. .. | 30,000 | 30,000 | 30,000 |
| 4. Re-grinding .. .. .. .. | 4,000 | 4,000 | 4,000 |
| 5. Leaching .. .. .. .. .. | 50,000 | 50,000 | 50,000 |
| 6. Filter pressing .. .. .. .. | | | |
| 7. Briquetting .. .. .. .. | 2,000 | 2,000 | 2,000 |
| 8. Smelting .. .. .. .. .. | 15,000 | 15,000 | 15,000 |
| 9. Refining .. .. .. .. .. | 5,000 | 5,000 | 5,000 |
| Common to all processes .. .. | 112,500 | 112,500 | 112,500 |
| 10. Copper recovery .. .. .. .. | .. | .. | .. |
| 11. Pumping and cascading .. .. .. | .. | 3,000 | 2,000 |
| 12. Electro depositing .. .. .. | .. | 90,000 | 60,000 |
| 13. Evaporating and heating .. .. | .. | 3,000 | 2,000 |
| 14. Solution evaporating plant .. .. | 6,000 | .. | 2,000 |
| 15. Mixing works .. .. .. .. | 3,000 | .. | 1,000 |
| 16. Drying and furnacing plant .. .. | 15,000 | .. | 5,000 |
| 17. Finishing furnaces .. .. .. | 3,000 | .. | 1,000 |
| 18. Acid chambers and towers .. .. | 30,000 | .. | 10,000 |
| 19. Zinc retorting furnaces .. .. .. | 30,000 | .. | 10,000 |
| 20. Supplementing supply gases .. .. | .. | .. | .. |
| Total .. .. .. .. | £199,500 | £208,500 | £205,500 |

This expenditure is large, and in addition to the items enumerated it will be necessary for anyone engaging in this business to provide capital for the erection of waterworks, railway sidings, ore floors and bins at seaports and general outlays, which can hardly cost less than £25,000 for works of the size under consideration. A considerable sum as working capital is also necessary.

It is not therefore surprising that the mining companies should hesitate or be unable to spend the considerable sums required to work their low grade ores by these methods, but nevertheless the author thinks that in the absence of any revolutionary improvement in other directions, the methods here described offer a valuable and legitimate solution of the great sulphide problem, which not only will yield a good return on the capital outlay at once, but which may reasonably be expected to be very much improved in efficiency in future work by experience gained.

Digitized by Google

It is scarcely necessary to point out that the business presented a very much more encouraging aspect at the time of the formation of the Sulphide Corporation, when it was confidently supposed that the company's available ore supplies contained from £3 to £5 per ton additional value, all of which would have been additional profit.

The author cannot conclude this paper without expressing his appreciation of the painstaking and assiduous work done by the manager at Cockle Creek, Mr. A. E. Savage, the assistant manager, Mr. J. W. Ashcroft, and all the junior staff, under conditions of climate and demands on their continuous attention which were at times physically very trying.

---

## DISCUSSION.

**The President** said that the paper that had just been read was one of great value as a means of reference to those metallurgists who were working in the direction of the treatment of sulphide ores. There were certain statements which might be disputed by some members who had made a study of that particular branch of metallurgy, and some of the conclusions as to costs could only be established by practice, but Mr. Ashcroft's statement as to the extremely unsatisfactory returns by the present system of concentration, and the necessity for a complicated chemical system of treatment in order to save the value of the various metals present, made it important to consider whether some such process as that before them, although not appearing a success up to the present, was the only solution of the difficulty in sight at that moment.

**Professor Huntington** thought it was due to Mr. Ashcroft to acknowledge their indebtedness to him for his valuable contribution. He had had to look into many electrolytic processes. With regard to roasting, he had heard it stated by men who ought to know better, that some 90 per cent. or more of the zinc could be converted into sulphate; Mr. Ashcroft made it clear that at the most it was only the lead that could be converted into sulphate, while the zinc had to be so converted by other means; such had been his experience. On a different kind of ore it was quite possible to convert a good deal of zinc into sulphate by roasting at a low temperature, but in the ore in question the lead and zinc were

Digitized by Google

so intimately mixed, that in roasting them the oxides and sulphides reacted on one another and brought about a totally different condition of things. The result was that, however careful one might be, only enough sulphuric acid was left in to represent sulphate of lead, and sulphuric acid had to be supplied for the zinc subsequently.

Mr. Ashcroft had had opportunities of working at the process such as was not possible for other people, and his own experience in the main corroborated the author's statements. As to leaching, one of the greatest difficulties to contend with was undoubtedly the soluble silica. He also had experienced the great difficulty of filtering; if the ore was leached and let alone for a short time, a lot of silica was released and nothing could be done with it. The author said that aëration was a considerable advantage, and he agreed with him. He had found that aëration did unquestionably make a vast difference in working such ore. Using bleach was very unsatisfactory and expensive, but aëration was a most effective, simple, and clean operation. There was a revolving disc arrangement, invented by a German, by means of which a very much better deposition of the zinc was obtained; a good deal could be said for it when working with chlorides, but he had a strong suspicion that much of the advantage derived from the use of the revolving disc was due to aëration. As he had said, its advantage was mainly when using chlorides; when sulphuric acid was used it was another matter altogether, because in that case the acid was retained in the solution, but when using chlorides chlorine was produced which passed out of the solution as chlorine gas.

With regard to the deposition of the zinc, he wished to ask if Mr. Ashcroft could tell them anything about the effect of temperature. Personally he had found that the temperature influenced the deposit considerably; he had noticed that at a certain temperature a very good deposit might be obtained, but if the temperature was elevated, the reverse was the case.

It was difficult to maintain a uniform temperature in the room during the winter, and he had used a burner under the table he was working on, which had the effect of warming the table and creating currents of air round the cathodes. The result was disastrous in bringing about the deposition of spongy zinc.

**Mr. H. L. Sulman** considered that Mr. Ashcroft's paper was a most valuable contribution to the metallurgy of these complex ores. The paper was a model of candour; Mr. Ashcroft had extenuated nothing, but although up to the present he had only

Digitized by Google

failure to chronicle, this was largely due to causes absolutely beyond his control. He was sure that their sympathies were with the author, and the thanks of the Institution were due to him for the mass of detailed information he had placed before them, which could not fail to be useful to those engaged in endeavouring to solve one of the most difficult problems in modern metallurgy.

The main fact brought out by the paper was the failure of metallurgical science to deal with the ores even when they contained metals to the value of from £8 to £9 per ton. It certainly seemed remarkable that the best results that could be shown were an estimated profit, by Mr. Ashcroft's process, of £1 per ton, and an actual one of 8*s.* per ton by the old concentration method.

Looking at the process from a financial standpoint, it was necessary to enquire whether it could be regarded as a very great advance upon the results obtained from concentration. The author stated that concentration would save something like 8*s.* per ton out of a total metal value of about £8 per ton, while at the end of the paper an estimate was given as to the total cost per ton of ore by three processes—the cost by the oxide process being £6 3*s.*; by the electro process £5 8*s.* 1*d.* and by the joint process £5 12*s.*, which in the case of the first gave a profit of 9*s.* 6*d.* per ton, and in the joint process gave a profit of £1 0*s.* 3*d* per ton, while the electrolytic process, if possible to work cyclically, gave an estimated profit of £1 4*s.* 1*d.* per ton. Mr. Ashcroft had stated that under present conditions he would prefer to work with the joint process. Certain factors, notably the accumulation of manganese, prevented the electro process being worked cyclically. These figures meant that if they were dealing with 1,000 tons per week, there would be an annual profit of something like £52,000. But in taking that figure as the profit they had also to consider the capital outlay which was required to produce it. Taking Mr. Ashcroft's figures, works to treat 1,000 tons per week would cost, roughly speaking, £200,000, besides £25,000 required for wharfage, railway sidings and general outlay, and a further considerable sum for working capital. Therefore it would require £250,000 for works to deal with 1,000 tons a week, which would mean, as things went now-a-days, a capitalization of at least half a million for the production of £52,000 profit per annum. He did not know whether Mr. Ashcroft had included in his estimates allowances for sinking fund and depreciation, but in view of the uncertain condition of the ore reserves it would be

Digitized by Google

absolutely necessary to establish a sinking fund for works on such a scale, and 15 per cent. would be by no means a large margin for these two allowances. That would mean that out of the £52,000 profit per annum something like £37,000 would have to be set aside for depreciation and sinking fund, leaving only some £15,000 profit on a capitalization of half a million, or £250,000 if the plant alone were considered. On the former capital it would mean a return of 3 per cent., and even then it had to be pointed out that it was only an estimated profit. Mr. Ashcroft had constantly referred to his actual costs in the text of the paper, and they must remember that the £1 per ton profit was only an *estimate*. In leaching, for example, the cost was estimated at 4*s*. as against an actual cost of 6*s*. 2*d*.; there were other items, notably smelting, which was put down at 12*s*. as against 30*s*. Therefore, while admitting that Mr. Ashcroft had excellent reasons for adopting such estimates, these could only be accepted as such. Like many others, he had till lately regarded wet processes as likely to be the salvation of complex ores such as described by the author, but he felt, after hearing the enormous difficulties he had had to contend with, which had been met so pluckily and with such ingenuity, that wet processes were surrounded with almost insuperable difficulties. He thought it would stimulate them to try once again whether some smelting process could not be made to yield a greater profit than the very dubious one appearing in the paper.

**Dr. Steinhart** said that it seemed to him that the loss which was supposed to be due to leakage was nothing more nor less than the re-solution of the zinc by the sulphuric acid. With regard to aëration, he believed that Messrs. Siemens and Halske took out a patent for blowing the solutions with air, and in the Hartz Mountains in the manufacture and purification of zinc vitriol it was the practice to simply stir the solutions, which had practically the same effect.

There was little to be said with regard to this wet extraction process, as had been pointed out the balance sheet did not come out very well, although a tremendous amount of work and ingenuity had been expended upon it, not only by Mr. Ashcroft but by others, and it was not surprising that people were looking in other directions for an effective process, which he thought would most probably be found in the direct treatment of the ore, whether purely metallurgical or by electrolysis in the fused state.

**Mr. Picard** desired to know how far the zinc liquors were exhausted in the electrolysis, and also whether, when they got

Digitized by Google

weak in zinc, the amount deposited (1 gram per ampere) was still maintained, or whether it fell off.

**Mr. Ashcroft**, in reply, stated that the strength of the solution made no difference at all. He had deposited it down to 2 grams per litre of zinc.

**Mr. A. C. Claudet** said that in discussing a paper such as that before them that evening, it was most desirable to have the opinions of those who had been on the spot. He laboured under the disadvantage of not having been to Broken Hill, but had had a great deal to do with the ores and products from that locality. One great point about Mr. Ashcroft's paper was that his process was the first chemical process which had been attempted on a large scale in Broken Hill ores. Other wet processes had been tried on a very small scale, and the majority of them started by roasting; hence the great value of Mr. Ashcroft's paper, the figures in which could be taken as being the same for all chemical processes on the ore direct up to the point of the zinc extraction. With regard to the treatment of Broken Hill ore generally, he spoke with the greatest caution. He felt certain that the Broken Hill companies would never be induced to treat their ores direct, unless it could be clearly shown that a greater profit could be made than now, and they would therefore continue to concentrate, which he thought was a step in the right direction, as the leady concentrates yielded a fair profit at present prices. Any process to be adopted afterwards should be devised for the treatment of the middle products and the slimes, and possibly a wet chemical process might succeed on these products which would not answer on the ore treated direct. Another point in favour of dealing with the middle product was, that if roasting were necessary a less number of furnaces, tanks, and other plant would be required than in the case of the ore treated direct. The price obtained for the concentrates was liable to the fluctuations of the market values of the metals concerned, and if silver went down concurrently with lead the profit might be swept away, and this applied equally to the products obtained by any other process. The difficulty was to deal with an ore subject to a decreased value in the price obtained for the metals, a decrease (as the author had pointed out) in the proportion of silver, lead, and zinc in the ores, and, in addition, increases in labour and material. At any time the rate of the latter might go up, but under the best conditions there was but a small margin, consequently great caution was necessary in altering present processes and adopting new ones. He was sure that to successfully treat Broken Hill ore it would have to be

Digitized by Google

done on a very large scale indeed, and the larger the better. It must be borne in mind that the Broken Hill companies had spent large sums of money on concentration plant, and it was not likely that, on the showing of Mr. Ashcroft's figures, or those of any similar process involving a complicated plant and requiring supervision of an almost scientific character, they would throw away the whole of the money expended on the concentrating plants and embark in a venture of great uncertainty, seeing that they were able to make a certain amount of profit out of concentration, stocking the zinc concentrates for future treatment.

With regard to direct smelting, there was no doubt that a process of this kind would appeal to all as being a more satisfactory solution of the problem, if it could be done at the price that various inventors maintained it could. That, however, could only be proved on a large scale, and people had yet to be found to face the difficulties and accept the risks—proving the success or otherwise—of such a process, which must involve a large expenditure of money.

He thought it would have rendered the paper more complete if Mr. Ashcroft had included an analysis of the Central Broken Hill ore, and also analyses of the various other products. He also considered it would have been useful if the author had provided a detailed list of the plant required to work his process. From the paper it appeared that there were at least 250 vats for the electrolytic deposition of the zinc; there were also 12,000 cathodes, and, he supposed, any number of extra tanks and other accessories, in order to treat only 1,000 tons of ore per week; the area of ground covered by the plant must be very great, and the companies mentioned by Mr. Ashcroft each worked not less than 2,500 tons per week, the total, according to the figures given by the author, being 17,500 tons per week, consequently, a process such as his was almost prohibitive, the margin for profit being liable to be swept away by one or two adverse circumstances, and not at all likely to be adopted in general. It was difficult to understand how people could embark on such a hazardous undertaking, but he hoped that for the sake of the company and of Mr. Ashcroft they would be able to bring it to a successful issue; he certainly thought that the pains taken by the author, and by those whose assistance he acknowledged in his paper, deserved to be crowned with success.

With regard to the method of agitation of the roasted ore in the dissolving tanks, he desired to ask Mr. Ashcroft whether he was certain it would be a success, as the ore would settle quickly

Digitized by Google

even if finely ground, and he thought it would be a difficult matter to agitate it thoroughly.

**Mr. Ashcroft** remarked that nothing but slimes could be treated by the process, and if it were not slimes it had to be made so. There was no difficulty with regard to the agitation, and it was really the simplest part of the process.

**The President**, in closing the discussion, said that, as Mr. Claudet had pointed out, the difficulties had certainly not been overcome, and while calculations seemed to promise an improvement in results, the capital to be invested and the complicated series of processes to be gone through (all subject to entire disorganization by the smallest changes in the ore composition and method of roasting) made it a very unattractive proposition. There was, however, nothing better known at present, and they could take it that the wet process would continue to be investigated for some time to come, whatever the ultimate results as compared with the direct process might be. In the course of a short time they would doubtless have the commercial results of the smelting process with sulphate of soda, and the obtaining of the zinc by a secondary process which might help them in coming to a decision. The paper would certainly have value in pointing out the difficulties which had to be faced, and might even serve as a scarecrow to prevent people hastily going into that method of treatment in the future. Some of the points brought out by the author in regard to the deposition of zinc in a saleable form on a large scale of production was a distinct advance in a scientific direction, if not commercially satisfactory for other reasons.

The difficulties which had been encountered in keeping the solutions sufficiently pure for the purpose of working the process continuously might, it was suggested, be overcome by the removal of a portion of the solution, and in that way it might not be an insuperable objection, but he thought the tests which had been made had not been for a sufficiently long period to establish what proportion of the solution would have to be removed.

He thought they would all agree that Mr. Ashcroft's paper was an extremely modest one in regard to the conclusions arrived at. In the paper suggestions were made, and Mr. Ashcroft's opinion was that in that direction a successful solution of the difficulty might be looked for. The objections the author himself pointed out, however, prevented them from accusing him of being rash in placing his opinions before them, and the fact that Mr. Ashcroft had worked on such a scale and obtained such results entitled his

Digitized by Google

opinion to as full consideration as that of any other metallurgist who had worked on those difficult ores.

**Mr. Ashcroft** in replying to the points raised in the discussion, said he was much obliged for the flattering remarks of the members in respect of his paper. No one could be more alive than he was himself to the unattractive nature of the figures and the many difficulties which his work on that process had revealed, when he wrote it he had an idea of entitling it "In memoriam."

With regard to Professor Huntington's remarks, he had also had the experience of reading patent specifications in which the figures had to be taken as gospel and which were, as a matter of fact, more or less vague and delusive. With regard to the revolving disc mentioned, he had been familiar with the apparatus for some time. If, however, they would look at the photograph of one of the vat rooms, they would realise the impossibility of fitting it up with such discs and the necessary belts. Difficulties such as that were not apparent to anyone (however well versed in the subject) who had not been engaged in practical operations on a large scale, but were painfully evident to those on the spot. As to the temperature, he thought there was nothing in the temperature itself which prevented a good deposit of zinc. His experience was that if he got a solution that would work at 25° C., and he raised the temperature to 50°, it probably would not deposit it all; on the other hand he had often deposited good zinc from solutions at boiling point. As a matter of fact, the nearer they approached to the condition of solution which he called "good," the less were such modifications and conditions liable to interfere with the work. When he got a really good solution it could be boiled and allowed to freeze without altering its condition at all. He could only tell them how to make the solution, but could not explain the reasons for the results obtained.

With reference to Mr. Sulman's remarks as to the profit and capital outlay, no one was more alive than himself to the melancholy figures, but when the Sulphide Corporation was floated with flying colours it was confidently expected to make large amounts of profits on the capital provided. At that time the margin was not £1 but £6 per ton, owing to the supposed higher metal contents, and a calculation made on that basis would materially alter Mr. Sulman's statement. Mr. Sulman and Mr. Claudet had referred to the fact that many of the figures were simply estimates; for his own part he hated estimates, as they were seldom borne out by results, but his figures were really

Digitized by Google

something more than estimates; they were really based on practical working on large quantities of ore. As to the deductions, they were made with absolute certainty, the costs of labour and other charges being well known.

Several speakers had mentioned dry processes, but he wished to bring out the fact that in the case of the wet process one company alone had spent £250,000 in works, and that was the company he would like to see get something for its expenditure. If they started spending another £250,000 on dry processes, based on equally unreliable estimates, they would soon have no more money to spend. He did not consider the sulphide ore problem to be the most attractive one in the metallurgical world at the present time, and thought that investors would not tumble over one another to put money into it; but he was certain that, eventually, the problem would be solved. There were 80 millions sterling lying in the Broken Hill deposits which would ultimately be made to yield their contents, and those who had the pluck, energy, patience, and wisdom would get it. In putting up works of such magnitude it was not possible to try a wet process for six months and then turn round and use a dry one. No doubt people would be found to give the dry processes a trial; they had been tried for a long time, and the result had been unfavourable, but it was possible that it might be improved upon as had been done with the wet process. His own opinion was that the figures he had put before them with regard to the wet process were much more certain than any that had been submitted with regard to dry processes, and he would like to see his example followed by owners of the latter giving similar figures.

With regard to Dr. Steinhart's opinion that the shortage noticed in the acid solution was due to the re-solution of the zinc rather than to inter-vat leakage, he thought the truth lay halfway, and that it was owing both to inter-vat leakage and the re-solution of the zinc in the free acid. It was immaterial whether it was a re-solution of zinc, or transfer of current by the acid in the solution; every shortage of zinc was accompanied by the evolution of hydrogen, and if 10 per cent. zinc was carried off by the sulphuric acid in the solution there would be an equivalent amount of hydrogen set free. In actual experience, there was no apparent dissolving of the zinc until the acid became very strong, as he had gone up to 30 and 40 grams of free acid in solution without materially dissolving it. It might be said that if 5 grams of free acid would dissolve so much zinc in an hour, there would be ten times as much shortage of zinc from 50 grams; but in reality

Digitized by Google

such would not be the case. The fact was the deposit went on satisfactorily until the climax was reached when it commenced to attack the zinc, and in a short time the whole plate was gone. He imagined that some local action was set up which caused the plate to dissolve away.

He quite appreciated the spirit of Mr. Claudet's remarks, and agreed with him that the Broken Hill people were not likely to adopt such a process as had been described in the paper until something better could be shown than he had been able to put before them that evening. If he were the single owner of the Broken Hill mines he would go on with concentration, as, although not an ideal process, the ore could be worked at a profit by it. He would probably have the pluck to spend money in working out other processes, but he would do it on a small scale at first and have it definitely proved before spending money largely. It might be said that he had been instrumental in spending £250,000 on a process which was not definitely proved before putting up the works; he could only say that the profits expected were enormous, and the margins allowed were very large, and at the time appeared ample for anything that might arise, but the margins had, owing to various circumstances, been swept away and the result had been failure. Large testing works had been erected at Grays, but, given similar conditions, in future he would undoubtedly spend money much more cautiously and go ahead much more slowly than had been the case in the present instance.

With regard to agitation, it was a very simple and perfect process, and the wear and tear less than it would appear to be.

As to the President's remarks about the removal of the solutions, he thought the fact had been overlooked that it was a mere matter of mathematical calculation. If a given quantity of manganese went into the solution at each cycle, it could be mathematically determined what it would amount to in one or six years hence. There was no practical difficulty in that; and in stating the extraction by the electrolytic process as 60 per cent., he had put it low so as to allow an ample margin for keeping the impurities below what was found practicable in actual work.

In conclusion, he certainly agreed with the President's remark that there was room for something better.

The following paper was next taken as read:—



Digitized by Google

## "Some Peculiarities occurring in the Melting of Gold and Silver Bullion of various Finenesses."

By George Attwood, M.Inst.M.M.

In arranging some old mineral cabinets containing an accumulation of ores and metals from different parts of the world, the writer decided to melt up some of the metals which were of no special interest.

The fusion was made in a Battersea No. 9 fluxing pot, in one of Hoskins' hydro-carbon blow-pipe furnaces. (The latter is capable of producing a very high temperature and intense heat.) In charging the crucible, the first pieces of metal placed in the bottom were composed of Comstock lode bullion (Nevada, U.S.A.), which assayed about

| | | |
|---|---|---|
| Gold..... | 050 | fine. |
| Silver ..... | 940 | „ |
| | 990 | „ |

Then alluvial gold from South America, India, Idaho (U.S.A.), and other parts of the world were added, all of the latter being more or less mixed with black sand (magnetite). The fineness of the best of the alluvial gold was about $\frac{950}{1000}$, but some of the pieces were only about $\frac{850}{1000}$ fine in gold. A few assay chips, both silver and gold, were placed on the top of the alluvial gold and black sand.

Dried borax and carbonate of soda were used as fluxes, and the mixture brought to a thorough state of fusion. When the mixture was found to be quite melted, the crucible was taken out of the furnace, swung round several times, and then an intense heat maintained for fully half an hour, during which time it was taken out of the furnace twice and swung round both times. The surface of the metal was observed to be covered with the flux and fused black sand, and it was *not stirred* nor the flux *skimmed* off, but the crucible was taken out of the furnace, allowed to cool, and

Digitized by Google

then broken, when the metal was found to be covered with a heavy dark slag, about half an inch thick, and sufficient to exclude air.

Upon examination, the lump of metal, which weighed 13¼ oz., was found to show a distinct gold-yellow colour at and near the bottom, and to be silver-white at the top.

The result was unexpected after the metal had been in a state of fusion at a very strong heat for fully half an hour, and it would have been reasonable to expect a more homogeneous alloy. Chippings were then taken from the top, middle and bottom, and the metal was found to be thoroughly fused throughout and malleable, and the pieces selected for assay were beaten out without annealing.

The following diagram gives the assay results :—

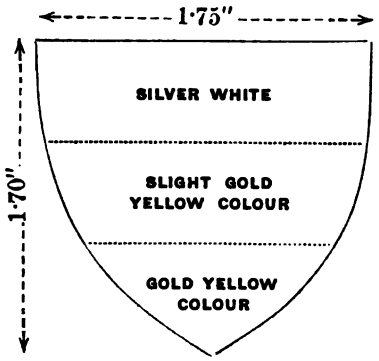


802·5 Ag
168·5 Au = £0 14*s.* 3½*d.* per oz.
971·0 fine.

723·5 Ag
242·5 Au = £1 0*s.* 6½*d.* „
966·0 fine.

268·5 Ag
690·5 Au = £2 18*s.* 7½*d.* „
959·0 fine.

The exclusion of air caused by the heavy slag on the top of the molten metal, and the metal not being stirred, appear to have contributed largely to the partial settlement of the gold by reason of its greater density to that of silver. If the writer had expected any such results as the above, he would not have swung the crucible at all, but allowed the heat alone to have full play, and then have made his assays. The difference in the fineness of gold, varying from 690·5 at the bottom of a piece of alloy ($1\frac{7}{16}$ in. deep) to 168·5 at the top, after a long and thorough fusion has taken place, is considerable, and it is one of some interest to metallurgists, and especially to those who are continually sampling and assaying alloys of not only the precious metals, but also of the baser ones.

Digitized by Google

To ascertain the presence of other metals besides silver and gold, an analysis was made of chippings taken from different portions of the alloy:

| | Per cent. |
|---|---|
| Silver ..... | 66·15 |
| Gold..... | 30·15 |
| Lead..... | 0·18 |
| Iron ..... | 0·35 |
| Iridium ..... | Strong trace. |
| Zinc..... | „ „ |
| Palladium ..... | Trace. |
| Platinum..... | „ |
| Copper..... | 3·10 |
| | 99·93 |

A further examination was made of the lump of alloy by cutting it through from top to bottom with a fine saw. The gold-yellow colour at the bottom, as well as the silver-white at the top, was observed through the centre of the lump in a similar manner to what is found on the outside, and that the mass had been thoroughly fused was confirmed.

## DISCUSSION.

**Mr. Claudet** said the obvious explanation was, of course, that the bullion was not properly mixed, otherwise the metals would not have separated as they did. It was extraordinary how comparatively few people, accustomed to melt mixtures of metals, took the trouble to ascertain whether they were really properly mixed. If the metal had been stirred the resulting metal would have been homogeneous; in the lump exhibited the gold colour could be clearly seen at the bottom and the silver at the top.

He commended this paper to the careful consideration of students of the Institution, to whom perhaps, more than to the other members, the notes appealed.

**The President** said that Mr. Claudet had pointed out what appeared to be the explanation. The Council were pleased to have such notes dealing with any peculiar occurrences in the experience of the members, as by placing the difficulties before the Institution other members might be able to suggest means of overcoming them.

Digitized by Google

# INDEX TO VOLUME VI.


PAGE

Accounts, statement of .. .. .. .. .. .. .. .. .. 178
Discussion—A. C. Claudet, 180; Professor Huntington, 181; James Mactear, 180, 181, 182.

Annual General Meeting, Seventh .. .. .. .. .. .. .. 175

*Argentiferous and Auriferous Lead, with Diagrams illustrating the Unequal Distribution (Segregation) of the Precious Metals, Notes on the sampling of.* By Arthur C. Claudet .. .. .. .. .. 29
Discussion—H. T. Barker, 34; A. G. Charleton, 33, 36; A. C. Claudet, 35, 36; Professor Huntington, 34; Alfred James, 34; James Mactear, 35; T. Rickard, 34; Ernest A. Smith, 36.
Contributed Remarks—W. Dewar, 39; A. C. Claudet, 42; Professor Roberts-Austen, 42; Dr. T. K. Rose, 41.

*Argentiferous Copper, Notes on the Electrolysis of.* By William Terrill .. .. .. .. .. .. .. .. .. 215
Discussion—J. H. Collins, 218.

Ashcroft, Edgar A., *The Treatment of Broken Hill Sulphide Ores by Wet Extraction Processes, and the Electrolytic Deposition of Zinc* .. 282
Discussion—E. A. Ashcroft, 332, 334, 335; A. C. Claudet, 332; Professor Huntington, 328; Walter McDermott, 328, 334; H. K. Picard, 331; Dr. Steinhart, 331; H. L. Sulman, 329.

Attwood, George, *Some Peculiarities occurring in the Melting of Gold and Silver Bullion of various Finenesses* .. .. .. .. 338
Discussion—Walter McDermott, 340; A. C. Claudet, 340.

*Black Reef, Witwatersand Goldfields, South Africa, Mining on the.* By W. Fischer Wilkinson .. .. .. .. .. .. 94
Discussion—H. G. V. Adler, 105, 106; A. C. Claudet, 106; McClelland Henderson, 106; Professor Huntington, 105; James Mactear, 105, 106, 107; T. Rickard, 104.

*Broken Hill Sulphide Ores, Treatment of, by Wet Extraction Processes, and the Electrolytic Deposition of Zinc.* By Edgar A. Ashcroft .. 282
Discussion—E. A. Ashcroft, 332, 334, 335; A. C. Claudet, 332; Professor Huntington, 328; Walter McDermott, 328, 334; H. K. Picard, 331; Dr. Steinhart, 331; H. L. Sulman, 329.

*Buying and Sampling of Ores, and the Working of Mines on the Tribute System, in Chili, Notes on the.* By Gerald V. Hopkins .. .. 108

Claudet, Arthur C., *Notes on the Sampling of Argentiferous and Auriferous Lead, with Diagrams illustrating the Unequal Distribution (Segregation) of the Precious Metals* .. .. .. .. .. 29




Digitized by Google

PAGE

Discussion—H. T. Barker, 34; A. G. Charleton, 33, 36; A. C. Claudet, 35, 36; Professor Huntington, 34; Alfred James, 34; James Mactear, 35; T. Rickard, 34; Ernest A. Smith, 36.
Contributed Remarks—A. C. Claudet, 42; W. Dewar, 39; Professor Roberts-Austen, 42; Dr. T. K. Rose, 41.

*Combination Mill in the United States, Notes on a.* By Walter McDermott .. .. .. .. .. .. .. .. 245

*Copper, Notes on the Electrolysis of Argentiferous.* By William Terrill. 215
Discussion—J. H. Collins, 218.

Council for 1898–99 .. .. .. .. .. .. .. .. 181

Cowper-Coles, Sherard, *Some Notes on the Recovery of Gold from Cyanide Solutions* .. .. .. .. .. .. .. .. 212
Discussion—Sherard Cowper-Coles, 227; Alfred James, 225; T. H. Leggett, 224; Walter McDermott, 224, 227.

*Cyanide of Potassium, On the so-called Selective Action of.* By W. A. Dixon .. .. .. .. .. .. .. .. .. 88
Discussion—James Mactear, 91; Walter McDermott, 91.
Contributed Remarks—Dr. T. K. Rose, 92.

*Cyanide Process, Notes on Sump Solutions, Extractor-box Work, and cleaning up in the.* By Alfred James .. .. .. .. 2
Discussion—A. C. Claudet, 9; Professor Huntington, 9; Alfred James, 11; James Mactear, 10; Walter McDermott, 9.

*Cyanide Solutions, Some Notes on the Recovery of Gold from.* By Sherard Cowper-Coles .. .. .. .. .. .. .. 219
Discussion—Sherard Cowper-Coles, 227; Alfred James, 225; T. H. Leggett, 224; Walter McDermott, 224, 227.

*Cyanogen on Gold, Notes on the Action of.* By James Park .. .. 120
Discussion—A. C. Claudet, 126; D. A. Louis, 127; James Mactear, 127; Walter McDermott, 126.

*Determination of the Present Value of a Mine on the Rand.* By Fred. Hellmann .. .. .. .. .. .. .. .. 229
Discussion—A. A. Blow, 242; J. H. Collins, 239; Alfred James, 243; T. H. Leggett, 240; Walter McDermott, 239, 243.

*Diamonds at Inverell, New South Wales, On the Occurrence of.* By H. M. Porter .. .. .. .. .. .. .. .. .. 273

*Diamond Drilling in the Transvaal.* By W. Wybergh .. .. .. 164

*Direct Filling Process on the Witwatersrand, On the Successful Treatment of Tailings by the.* By F. Cardell Pengilly .. .. .. 113
Discussion—A. C. Claudet, 117, 118; J. H. Collins, 118; James Mactear, 118; Walter McDermott, 118; Arthur L. Pearse, 117.

Dixon, W. A. *Notes on the so-called Selective Action of Cyanide of Potassium for Gold* .. .. .. .. .. .. .. 88
Discussion—James Mactear, 91; Walter McDermott, 91.
Contributed Remarks—Dr. T. K. Rose, 92.

Eighth Ordinary Meeting .. .. .. .. .. .. .. 247

*Electrolysis of Argentiferous Copper, Notes on the.* By William Terrill .. .. .. .. .. .. .. .. .. 215

Digitized by Google

PAGE

Discussion—J. H. Collins, 218.

*Electrolytic Deposition of Zinc in the Treatment of Broken Hill Sulphide Ores by Wet Extraction Processes.* By Edgar A. Ashcroft .. 282

Discussion—E. A. Ashcroft, 332, 334, 335; A. C. Claudet, 332; Professor Huntington, 328; Walter McDermott, 228, 234; H. K. Picard, 331; Dr. Steinhart, 331; H. L. Sulman, 329.

Fifth Ordinary Meeting .. .. .. .. .. .. .. 140

*Filter-Press Treatment of Gold Ore Slimes (Hannan's, West Australia).* By William McNeill .. .. .. .. .. .. .. 247

Discussion—E. A. Ashcroft, 266; Charles Butters, 260, 263, 264, 265; A. C. Claudet, 262; J. H. Collins, 256; William Fairley, 265; Professor Huntington, 263; Alfred James, 259, 265; S. H. Johnson, 263, 264, 265; Walter McDermott, 256, 263, 266; William McNeill, 268; H. L. Sulman, 257, 265.

First Ordinary Meeting .. .. .. .. .. .. .. 1

Fourth Ordinary Meeting .. .. .. .. .. .. .. 113

Frecheville, William. *Notes of a Visit to the Gold Mines at Kalgoorli, Western Australia* .. .. .. .. .. .. .. 140

Discussion—J. H. Collins, 152; Joseph Garland, 152; Samuel Gifford, 153, 155, 158; Professor Huntington, 158; W. S. Lockhart, 154; James Mactear, 155; Walter McDermott, 153, 155, 157; T. Rickard, 154; Walter Smith, 154.

*Fuel at Caylloma, Peru, On the use of.* By Bernard Hunt .. .. 278

General Meeting, Seventh Annual .. .. .. .. .. .. 175

*Gold and Silver Bullion of Various Finenesses, Some Peculiarities occurring in the Melting of.* By George Attwood .. .. .. 338

Discussion—A. C. Claudet, 340; Walter McDermott, 340.

*Gold from Cyanide Solutions, Some Notes on the Recovery of.* By Sherard Cowper-Coles .. .. .. .. .. .. .. 219

Discussion—Sherard Cowper-Coles, 227; Alfred James, 225; T. H. Leggett, 224; Walter McDermott, 224, 227.

*Gold Mines at Kalgoorli, Western Australia, Notes of a Visit to the.* By William Frecheville .. .. .. .. .. .. .. 140

Discussion—J. H. Collins, 152; Joseph Garland, 152; Samuel Gifford, 153, 155, 158; Professor Huntington, 158; W. S. Lockhart, 154; James Mactear, 155; Walter McDermott, 153, 155, 157; T. Rickard, 154; Walter Smith, 154.

*Gold, Notes of the Action of Cyanogen on.* By James Park .. .. 120

Discussion—A. C. Claudet, 126; D. A. Louis, 127; James Mactear, 127; Walter McDermott, 126.

*Hannan's, The so-called Lode Formations and Telluride Deposits of.* By H. P. Woodward .. .. .. .. .. .. .. 14

Discussion—S. Herbert Cox, 25, 26; H. J. Daly, 26, James Mactear, 21, 23, 25, 26, 27; Walter McDermott, 22; C. A. Moreing, 23, 26; T. Rickard, 21; Dr. Woodward, 24.

Digitized by Google

PAGE

Hellman, Fred., *Determination of the present Value of a Mine on the Rand* .. .. .. .. .. .. .. .. .. 229
Discussion—A. A. Blow, 242; J. H. Collins, 239; Alfred James, 243; T. H. Leggett, 240; Walter McDermott, 239, 243.

Hopkins, Gerald V., *Notes on the Buying and Sampling of Ores, and the Working of Mines on the Tribute System, in Chili* .. .. 108

Hunt, Bernard, *On the Use of Fuel at Caylloma, Peru* .. .. .. 278

James, Alfred, *Notes on Sump Solutions, Extractor-box Work, and Cleaning-up in the Cyanide Process* .. .. .. .. .. 2
Discussion—A. C. Claudet, 9; Professor Huntington, 9; Alfred James, 11; James Mactear, 10; Walter McDermott, 9.

*Kalgoorli, Western Australia, Notes of a Visit to the Gold Mines at.* By William Frecheville .. .. .. .. .. .. 140
Discussion—J. H. Collins, 152; Joseph Garland, 152; Samuel Gifford, 153, 155, 158; Professor Huntington, 158; W. S. Lockhart, 154; James Mactear, 155; Walter McDermott, 153, 155, 157; T. Rickard, 154; Walter Smith, 154.

*Lead, Notes on the Sampling of Argentiferous and Auriferous, with Diagrams illustrating the Unequal Distribution (Segregation) of the Precious Metals.* By Arthur C. Claudet .. .. .. 29
Discussion—H. T. Barker, 34; A. G. Charleton, 33, 36; A. C. Claudet, 35, 36; Professor Huntington, 34; Alfred James, 34; James Mactear, 35; T. Rickard, 34; Ernest A. Smith, 36.
Contributed Remarks—A. C. Claudet, 42; W. Dewar, 39; Professor Roberts-Austen, 42; Dr. T. K. Rose, 41.

Mactear, James, *Notes on the South German Mine, Maldon, Victoria* .. 43
Discussion—F. E. Harman, 49; James Mactear, 48, 49; Walter McDermott, 48; T. Rickard, 48.
Contributed Remarks—W. Wybergh, 50.

McDermott, Walter, *Presidential Address* .. .. .. .. .. 183

McDermott, Walter, *Notes on a Combination Mill in the United States*.. 245
Discussion—R. T. Bayliss, 192; J. H. Collins, 193; Professor Huntington, 192; James Mactear, 193; Walter McDermott, 193.

McNeill, William, *Filter-Press Treatment of Gold Ore Slimes (Hannan's, West Australia)* .. .. .. .. .. .. .. .. 247
Discussion—E. A. Ashcroft, 266; Charles Butters, 260, 263, 264, 265; A. C. Claudet, 262; J. H. Collins, 256; William Fairley, 265; Professor Huntington, 263; Alfred James, 259, 265; S. H. Johnson, 263, 264, 265; Walter McDermott, 256, 263, 266; William McNeill, 268; H. L. Sulman, 257, 265.

*Mexican Methods of Mining.* By S. B. Newall .. .. .. .. 130
Discussion—J. H. Collins, 138; James Mactear, 139; Arthur L. Pearse, 137.

Digitized by Google

PAGE

Millar, C. C. Hoyer, *The Portable Mono-rail Transport System* .. 269
Discussion—Charles Butters, 272; A. C. Claudet, 272; Walter McDermott, 272; C. C. Hoyer Millar, 272.

*Minerals which accompany Gold, and their Bearing upon the Richness of Ore Deposits, The.* By T. A. Rickard .. .. .. .. 194
Discussion—S. Herbert Cox, 212; Alfred James, 212; James Mactear, 211; Walter McDermott, 213; T. Rickard, 213.

*Mining in Perak.* By Frank Owen .. .. .. .. .. .. 51
Discussion—Benedict Kitto, 86; T. Rickard, 86; A. Strauss, 84.

*Mono-rail Transport System, the Portable.* By C. C. Hoyer Millar .. 269
Discussion—Charles Butters, 272; A. C. Claudet, 272; Walter McDermott, 272; C. C. Hoyer Millar, 272.

Newall, S. B., *Mexican Methods of Mining* .. .. .. .. .. 130
Discussion—J. H. Collins, 138; James Mactear, 139; Arthur L. Pearse, 137.

Ninth Ordinary Meeting .. .. .. .. .. .. .. 282

Owen, Frank, *Mining in Perak* .. .. .. .. .. .. 51
Discussion—Benedict Kitto, 86; T. Rickard, 86; A. Strauss, 84.

Park, James, *Notes on the Action of Cyanogen on Gold* .. .. .. 120
Discussion—A. C. Claudet, 126; D. A. Lewis, 127; James Mactear, 127; Walter McDermott, 126.

Pengilly, F. Cardell, *On the Successful Treatment of Tailings by the Direct Filling Process on the Witwatersrand* .. .. .. 113
Discussion—A. C. Claudet, 117, 118; J. H. Collins, 118; James Mactear, 118; Walter McDermott, 118; Arthur L. Pearse, 117.

*Perak, Mining in.* By Frank Owen .. .. .. .. .. .. 51
Discussion—Benedict Kitto, 86; T. Rickard, 86; A. Strauss, 84.

Porter, H. M., *On the Occurrence of Diamonds at Inverell, New South Wales* .. .. .. .. .. .. .. .. 273

*Presidential Address.* By Walter McDermott .. .. .. .. 183
Discussion—R. T. Bayliss, 192; J. H. Collins, 193; Professor Huntington, 192; James Mactear, 193; Walter McDermott, 193.

Receipts and Payments .. .. .. .. .. .. .. .. 178
Discussion—A. C. Claudet, 180; Professor Huntington, 181; James Mactear, 180, 181, 182.

Report of the Council .. .. .. .. .. .. .. .. 175

Rickard, T. A., *The Minerals which accompany Gold, and their Bearing upon the Richness of Ore Deposits* .. .. .. .. .. 194
Discussion—S. Herbert Cox, 212: Alfred James, 212; James Mactear, 211; Walter McDermott, 213; T. Rickard, 213.

*Sampling of Argentiferous and Auriferous Lead, with Diagrams illustra-*

Digitized by Google

PAGE

*ting the Unequal Distribution (Segregation) of the Precious Metals, Notes on the.* By Arthur C. Claudet.. .. .. .. .. 29
Discussion—H. T. Barker, 34; A. G. Charleton, 33, 36; A. C. Claudet, 35, 36; Professor Huntington, 34; Alfred James, 34; James Mactear, 35; T. Rickard, 34; Ernest A. Smith, 36.
Contributed Remarks—A. C. Claudet, 42; W. Dewar, 39; Professor Roberts-Austen, 42; Dr. T. K. Rose, 41.
Second Ordinary Meeting .. .. .. .. .. .. .. 43
*Selective Action of Cyanide of Potassium for Gold, Note on the so-called.* By W. A. Dixon.. .. .. .. .. .. .. .. 88
Discussion—James Mactear, 91; Walter McDermott, 91.
Contributed Remarks—Dr. T. K. Rose, 92.
Seventh Ordinary Meeting .. .. .. .. .. .. .. 215
*Shaft Sinking, Notes on.* By William Teague .. .. .. .. 159
Discussion—H. G. V. Adler, 162; Joseph Garland, 162; Samuel Gifford, 163; W. S. Lockhart, 163; T. Rickard, 163; W. L. Wildly, 162.
Sixth Ordinary Meeting .. .. .. .. .. .. .. 194
*Slimes, Filter-press Treatment of Gold Ore (Hannan's, West Australia).* By William McNeill .. .. .. .. .. .. .. 247
Discussion—E. A. Ashcroft, 266; Charles Butters, 260, 263, 264, 265; A. C. Claudet, 262; J. H. Collins, 256; William Fairley, 265; Professor Huntington, 263; Alfred James, 259, 265; S. H. Johnson, 263, 264, 265; Walter McDermott, 256, 263, 266; William McNeill, 268; H. L. Sulman, 257, 265.
*Some Peculiarities occurring in the Melting of Gold and Silver Bullion of Various Finenesses.* By George Attwood .. .. .. .. 338
Discussion—A. C. Claudet, 340; Walter McDermott, 340.
*South German Mine, Maldon, Victoria, Notes on the.* By James Mactear .. .. .. .. .. .. .. .. .. 43
Discussion—F. E. Harman, 49; James Mactear, 48, 49; Walter McDermott, 48; T. Rickard, 48.
Contributed Remarks—W. Wybergh, 50.
Statement of Accounts .. .. .. .. .. .. .. .. 178
Discussion—A. C. Claudet, 180; Professor Huntington, 181; James Mactear, 180, 181, 182.
*Sulphide Ores (Broken Hill), the Treatment of, by Wet Extraction Processes, and the Electrolytic Deposition of Zinc.* By Edgar A. Ashcroft .. .. .. .. .. .. .. .. .. 282
Discussion—E. A. Ashcroft, 332, 334, 335; A. C. Claudet, 332; Professor Huntington, 328; Walter McDermott, 328, 334; H. K. Picard, 331; Dr. Steinhart, 331; H. L. Sulman, 329.
*Sump Solutions, Extractor-box Work, and Cleaning-up in the Cyanide Process, Notes on.* By Alfred James .. .. .. .. 2
Discussion—A. C. Claudet, 9; Professor Huntington, 9; Alfred James, 11; James Mactear, 10; Walter McDermott, 9.

*Tailings, On the Successful Treatment of, on the Witwatersrand, by the Direct Filling Process.* By F. Cardell Pengilly .. .. .. 113

Digitized by Google

PAGE

Discussion—A. C. Claudet, 117, 118; J. H. Collins, 118; James Mactear, 118; Walter McDermott, 118; Arthur L. Pearse, 117.

Teague, William, *Notes on Shaft Sinking* .. .. .. .. .. 159

Discussion—H. G. V. Adler, 162; Joseph Garland, 162; Samuel Gifford, 163; W. S. Lockhart, 163; T. Rickard, 163; W. L. Wildly, 162.

*Telluride Deposits, The so-called Lode Formations of Hannan's, and.* By H. P. Woodward .. .. .. .. .. .. .. 14

Discussion—S. Herbert Cox, 25, 26; H. J. Daly, 26; James Mactear, 21, 23, 25, 26, 27; Walter McDermott, 22; C. A. Moreing, 23, 26; T. Rickard, 21; Dr. Woodward, 24.

Terrill, William, *Notes on the Electrolysis of Argentiferous Copper* .. 215

Discussion—J. H. Collins, 218.

Third Ordinary Meeting .. .. .. .. .. .. .. 94

*Transport System, the Portable Mono-rail.* By C. C. Hoyer Millar .. 269

Discussion—Charles Butters, 272; A. C. Claudet, 272; Walter McDermott, 272; C. C. Hoyer Millar, 272.

*Treatment of Broken Hill Sulphide Ores by Wet Extraction Processes, and the Electrolytic Deposition of Zinc.* By Edgar A. Ashcroft.. 282

Discussion—E. A. Ashcroft, 332, 334, 335; A. C. Claudet, 332; Professor Huntington, 328; Walter McDermott, 328, 334; H. K. Picard, 331; Dr. Steinhart, 331; H. L. Sulman, 329.

*Treatment of Gold Ore Slimes (Hannan's, West Australia) by Filter-Press.* By William McNeill .. .. .. .. .. .. 247

Discussion—E. A. Ashcroft, 266; Charles Butters, 260, 263, 264, 265; A. C. Claudet, 262; J. H. Collins, 256; William Fairley, 265; Professor Huntington, 263; Alfred James, 256, 259; S. H. Johnson, 263, 264, 265; Walter McDermott, 256, 263, 266; William McNeill, 268; H. L. Sulman, 257, 265.

*Treatment of Tailings on the Witwatersrand by the Direct Filling Process.* By F. Cardell Pengilly .. .. .. .. .. .. 113

Discussion—A. C. Claudet, 117, 118; J. H. Collins, 118; James Mactear, 118; Walter McDermott, 118; Arthur L. Pearse, 117.

*Tribute System in Chili, Notes on the Buying and Sampling of Ores, and the Working of Mines on the.* By Gerald V. Hopkins .. .. 108

*Value of a Mine on the Rand, Determination of the Present.* By Fred. Hellmann .. .. .. .. .. .. .. .. 229

Discussion—A. A. Blow, 242; J. H. Collins, 239; Alfred James, 243; T. H. Leggett, 240; Walter McDermott, 239, 243.

Wilkinson, W. Fischer, *Mining on the Black Reef, Witwatersrand Goldfields, South Africa* .. .. .. .. .. .. .. 94

Discussion—H. G. V. Adler, 105, 106; A. C. Claudet, 106; McClelland Henderson, 106; Professor Huntington, 105; James Mactear, 105, 106, 107; T. Rickard, 104.

Woodward, H. P., *The So-called Lode Formations of Hannan's and Telluride Deposits* .. .. .. .. .. .. .. 14

Digitized by Google

PAGE

Discussion—S. Herbert Cox, 25, 26; H. J. Daly, 26; James Mactear, 21, 23, 25, 26, 27; Walter McDermott, 22; C. A. Moreing, 23, 26; T. Rickard, 21; Dr. Woodward, 24.

Wybergh, W., *On Diamond Drilling in the Transvaal* .. .. .. 164

*Zinc, Electrolytic Depositions of, in the Treatment of Broken Hill Sulphide Ores by Wet Extraction Processes.* By Edgar A. Ashcroft .. .. .. .. .. .. .. .. .. 282

Discussion—E. A. Ashcroft, 332, 334, 335; A. C. Claudet, 332; Professor Huntington, 328; Walter McDermott, 328, 334; H. K. Picard, 331; Dr. Steinhart, 331; H. L. Sulman, 329.

HARRISON AND SONS, Printers in Ordinary to Her Majesty, St. Martin's Lane.

Digitized by Google

Digitized by Google

Digitized by Google

SERIAL

Digitized by Google

Inst. Mining & Metallurgy

Transactions

Vol. 6, 1897-98

| DATE DUE | BORROWER'S NAME |
| --- | --- |
| | |
| | |
| | |
| | |
| | |
| | |
| | |
| | |
| | |
| | |

Digitized by Google

3 2044 102 933 355

Digitized by Google